JENN-AIR

MAYTAG®

Service

This manual is to be used by qualified appliance technicians only. Maytag does not assume any responsibility for property damage or personal injury for improper service procedures done by an unqualified person.

Combination Electric Wall Ovens and Microwaves

This Base Manual covers general information

Refer to individual Technical Sheet for information on specific models

This manual includes, but is not limited to the following:

JMW8527DA*
JMW8530DA*
JMW9527DA*
JMW9530DA*
MMW5530DA*

MAYTAG®

16022821
Revision 0
January 2004

Important Information

Important Notices for Servicers and Consumers

Maytag will not be responsible for personal injury or property damage from improper service procedures. Pride and workmanship go into every product to provide our customers with quality products. It is possible, however, that during its lifetime a product may require service. Products should be serviced only by a qualified service technician who is familiar with the safety procedures required in the repair and who is equipped with the proper tools, parts, testing instruments and the appropriate service information. **IT IS THE TECHNICIANS RESPONSIBLITY TO REVIEW ALL APPROPRIATE SERVICE INFORMATION BEFORE BEGINNING REPAIRS.**

WARNING

To avoid risk of severe personal injury or death, disconnect power before working/servicing on appliance to avoid electrical shock.

To locate an authorized servicer, please consult your telephone book or the dealer from whom you purchased this product. For further assistance, please contact:

Customer Service Support Center

CAIR Center

Web Site	Telephone Number
WWW.AMANA.COM	1-800-843-0304
WWW.JENNAIR.COM	1-800-536-6247
WWW.MAYTAG.COM	1-800-688-9900
CAIR Center in Canada	1-800-688-2002
Amana Canada Product	1-866-587-2002

Recognize Safety Symbols, Words, and Labels

DANGER

DANGER—Immediate hazards which **WILL** result in severe personal injury or death.

WARNING

WARNING—Hazards or unsafe practices which **COULD** result in severe personal injury or death.

CAUTION

CAUTION—Hazards or unsafe practices which **COULD** result in minor personal injury, product or property damage.

©2004 Maytag Appliances Company

Table of Contents

Important Information 2
Important Safety Information
ALL APPLIANCES 4
SELF-CLEANING OVEN 4
OVEN 4
In Case of Fire 4
Precautions 4
Microwave Leakage Testing 6
General Information
Cooking Nomenclature 7
Rating Label 8
Functional Operation 8
Cooking Guide 8
Specifications 9
Model Identification 9
Service 9
Parts and Accessories 9
Extended Service Plan 9
Wall Oven Troubleshooting Procedures 10
Microwave Troubleshooting Procedures 11
Wall Oven Testing Procedures 13
H1 Control 15
"Quick Test" Mode for Electronic Range Control .. 18
Description of Error Codes 18
UH1/2 Control 21
Test Mode 22
Description of Error Codes 23
Microwave Testing procedures 26
Wall Oven Disassembly Procedures
Removing and Replacing Unit 27
Control Panel Assembly 27
Control Board Assembly 27
Touch Panel 27
Side Trim(s) 27
Stepdown Transformer(s) 27
Oven High Limit 27
Oven Sensor (some models) 28
Oven Sensor (some models) 28
Broil Element / Broil Element Reflector 28
Convection Fan Assembly 28
Oven Bake Element 28
Door Latch / Door Light Switch Assembly 28
Oven Light Assembly 29
Oven Door Removal 30
Blower Motor 30
Vent Assembly / Smoke Eliminator 30
Oven Door Hinge 30
Frameless Door Disassembly 30
Microwave Disassembly Procedures
Removing and Replacing Unit 32
Side Trim(s) 32
Control Panel Assembly 32
Control Board Assembly 32
Touch Panel 33
Control Power Board 33
Filter Assembly Board 33
TCO Limit Switches (Oven and Magnetron) 34
Oven Sensor 34
Oven Light Assembly 34
Magnetron 35
Transformer 35
Blower Motor 35
Turntable Motor 36
Oven Door Removal 36
Door Disassembly 37
Appendix A
Installation Instructions A-2

Important Safety Information

CAUTION

To avoid personal injury, do not sit, stand or lean on oven door.

WARNING

To avoid risk of electrical shock, personal injury, or death, make sure your oven has been properly grounded and always disconnect it from main power supply before any servicing.

CAUTION

This appliance contains or produces a chemical or chemicals which can cause death or serious illness and which are known to the state of California to cause cancer, birth defects or other reproductive harm. To reduce the risk from substances in the fuel or from fuel combustion make sure this appliance is installed, operated, and maintained according to the instructions in this booklet.

ALL APPLIANCES

1. Proper Installation—Be sure your appliance is properly installed and grounded by a qualified technician.
2. Never Use Appliance for Warming or Heating the Room.
3. Do Not Leave Children Alone—Children should not be alone or unattended in the area where the appliance is in use. They should never be allowed to sit or stand on any part of the appliance.
4. Wear Proper Apparel—Loose fitting or hanging garments should never be worn while using appliance.
5. User Servicing—Do not repair or replace any part of the appliance unless specifically recommended in the manual. All other servicing should be referred to a qualified technician.
6. Storage in or on Appliance—Flammable materials should not be stored in oven.
7. Do Not Use Water on Grease Fires—Smother fire or flame, or use dry chemical or foam-type extinguisher.
8. Use Only Dry Potholders—Moist or damp potholders on hot surfaces may result in burns from steam. Do not let potholder touch burners. Do not use a towel or other bulky cloth.

SELF-CLEANING OVEN

1. Do Not Clean Door Gasket—The door gasket is essential for a good seal. Care should be taken not to rub, damage, or move the gasket.
2. Do Not Use Oven Cleaners—No commercial oven cleaner or oven liner protective coating of any kind should be used in or around any part of the liner.
3. Clean Only Parts Listed in Manual. See *Cleaning* section.
4. Before Self-Cleaning the Oven—Remove broiler pan, oven racks, and other utensils.

OVEN

1. Use Care When Opening Door—Let hot air or steam escape before removing or replacing food.
2. Do Not Heat Unopened Food Containers—Build-up of pressure may cause container to burst and result in injury.
3. Keep Oven Vents Ducts Unobstructed.
4. Placement of Oven Racks—Always place oven racks in desired location while oven is cool. If rack is removed while oven is hot, do not let potholder contact hot oven.

In Case of Fire

Fires can occur as a result of over cooking or excessive grease. Though a fire is unlikely, if one occurs, proceed as follows:

Oven Fires

1. If you see smoke from oven, do not open oven door.
2. Turn oven control to *OFF*.
3. As an added precaution, turn off power at main circuit breaker or fuse box.
4. Turn on vent to remove smoke.
5. Allow food or grease to burn itself out in oven.
6. If smoke and fire persist, call fire department.
7. If there is any damage to components, call repair service before using oven.

Precautions

- Do not mix household cleaning products. Chemical mixtures may interact with objectionable or even hazardous results.
- Do not put plastic items on warm cooking areas. They may stick and melt.
- Do not use damp sponge or dishcloth to clean oven when oven is hot. Steam from sponge or dishcloth can burn.
- Do not leave fat heating unless you remain nearby. Fat can ignite if overheated by spilling onto hot surfaces.

©2004 Maytag Appliances Company

Important Safety Information

⚠ CAUTION

Read the following information to avoid possible exposure to microwave radiation:

The basic design of the Amana microwave oven makes it an inherently safe device to both use and service. However, there are some precautions which should be followed when servicing the microwave oven to maintain this safety. These are as follows:

1. Always operate the unit from an adequately grounded outlet. Do not operate on a two-wire extension cord.
2. Before servicing the unit (if unit is operable) perform the microwave leakage test.
3. The oven should never be operated if the door does not fit properly against the seal; the hinges or hinge bearings are damaged or broken; the choke is damaged, (pieces missing, etc.); or any other visible damage can be noted. Check the choke area to ensure that this area is clean and free of all foreign matter.
4. If the oven operates with the door open and produces microwave energy, take the following steps.
   A. Tell the user not to operate the oven.
   B. Contact Maytag Appliances, Inc. immediately.
5. Always have the oven disconnected when the outer case is removed except when making the "live" tests called for in the Service Manual. Do not reach into the equipment area while the unit is energized. Make all connections for the test and check them for tightness before plugging the cord into the outlet.
6. Always ground the capacitors on the magnetron filter box and H. V. Capacitor with an insulated-handle screwdriver before working in the high voltage area of the equipment compartment. Some types of failures will leave a charge in these capacitors and the discharge could cause a reflex action which could make you injure yourself.
7. In the area of the transformer, capacitor, diode, and magnetron there is HIGH VOLTAGE. When the unit is operating - keep this area clean and free of anything which could possibly cause an arc or ground, etc.
8. Do not for any reason defeat the interlock switches– there is no valid reason for this action at any time; nor will it be condoned by Maytag.
9. IMPORTANT: Before returning a microwave to a customer, check for proper switch interlock action. The primary and secondary switches MUST open when the door is actuated. The monitor switch MUST close at a 1/4 inch when the door is opened.
10. Before returning a microwave to a customer, verify the door spacing is reasonably uniform along the top, bottom, and sides and that it measures 1/8 inch or less.
11. The Maytag microwave oven should never be operated with:
    - Any components removed and/or bypassed.
    - Any of the safety interlocks are found to be failed.
    - Any of the seal surfaces are defective, missing, or damaged.
12. To ensure that the unit does not emit excessive microwave leakage and to meet the Department of Health Human Service guidelines, check the oven for microwave leakage using Narda Model 8100, 8200, Holaday HI1500, HI1501 or Simpson 380M leakage monitor as outlined in the instructions. The maximum leakage level allowed is $4mW/cm^2$.
13. If servicer encounters an emission reading over $4mw/cm^2$ the servicer is to cease repair and contact the Amana Service Department immediately for further direction. Amana Appliances, Inc. will contact the proper Government Agency upon verification of the test results.

Microwave Leakage Testing

WARNING

Check for radiation leakage after servicing. Should the leakage be more than 4mW/cm^2 inform Amana Appliances, Inc. immediately. After repairing or replacing any radiation safety device, keep a written record for future reference, as required by DHHS and HEW regulations. This requirement must be strictly observed. In addition, the leakage reading must be recorded on the service repair ticket while in the customer's home.

Equipment

- Electromagnetic radiation monitor
- 600 cc glass beaker

Procedure For Measuring Radiation Leakage

Note before measuring -

- Do not exceed meter full scale deflection. Leak monitor should initially be set to the highest scale.
- To prevent false readings, the test probe should be held by the grip portion of the handle only.
- The scan speed is equal to one inch per antenna revolution or one inch per second if antenna speed is unknown.
- Areas to be checked are all door seal areas and any venting parts.
- Leakage with the outer panel removed ...4mW/cm^2 or less.
- Leakage for fully assembled oven with door normally closed ...4mW/cm^2 or less.
- Leakage for a fully assembled oven (before the latch switch (primary) is interrupted) while pulling the door ... 4mW/cm^2 or less.

1. Pour 275 ±15 cc (9 oz ±1/2 oz) of 20 ±5°C (68 ±9°F) water in a beaker which is graduated to 600 cc and place the beaker in the center of oven.
2. Set the radiation monitor to 2450 MHz and use it following the manufacturer's recommended test procedure to assure correct results.
3. While measuring the leakage, always use the 2–inch (5 cm) spacer supplied with the probe.
4. Press the start pad or turn on the timer and with the magnetron oscillating, measure the leakage by holding the probe perpendicular to the surface being measured.

Measurement With the Outer Panel Removed

DANGER

Avoid contacting any high voltage components.

Whenever you replace the magnetron, measure for radiation leakage before the outer panel is installed and after all necessary components are replaced or adjusted. Special care should be taken in measuring around the magnetron.

Measurement With a Fully Assembled Oven

After all components, including the outer panel are fully assembled, measure for radiation leakage around the door periphery, the door viewing window, the exhaust opening, and air inlet openings.

Record Keeping and Notification After Measurement

1. After any adjustment or repair to a microwave oven, a leakage reading must be taken. Record this leakage reading on the repair ticket even if it is zero.
2. A copy of the repair ticket and the microwave leakage reading should be kept by the repair facility.

©2004 Maytag Appliances Company

General Information

This manual provides basic instructions and suggestions for handling, installing , and servicing electric combination microwave/wallovens.

The directions, information, and warnings in this manual are developed from experience with, and careful testing of the product. If the unit is installed according to the Installation Instructions, it will operate properly and will require minimal servicing. A unit in proper operating order ensures the consumer all the benefits provided by efficient electric cooking.

This manual contains information needed by authorized service technicians to install and service electric combination microwave/wallovens pertaining to this manual. There maybe, however some information which needs further explanation. Refer to individual Installation Instructions, Use and Care, Technical Sheets, or toll free technical support line to answer questions from authorized service technicians.

Cooking Nomenclature

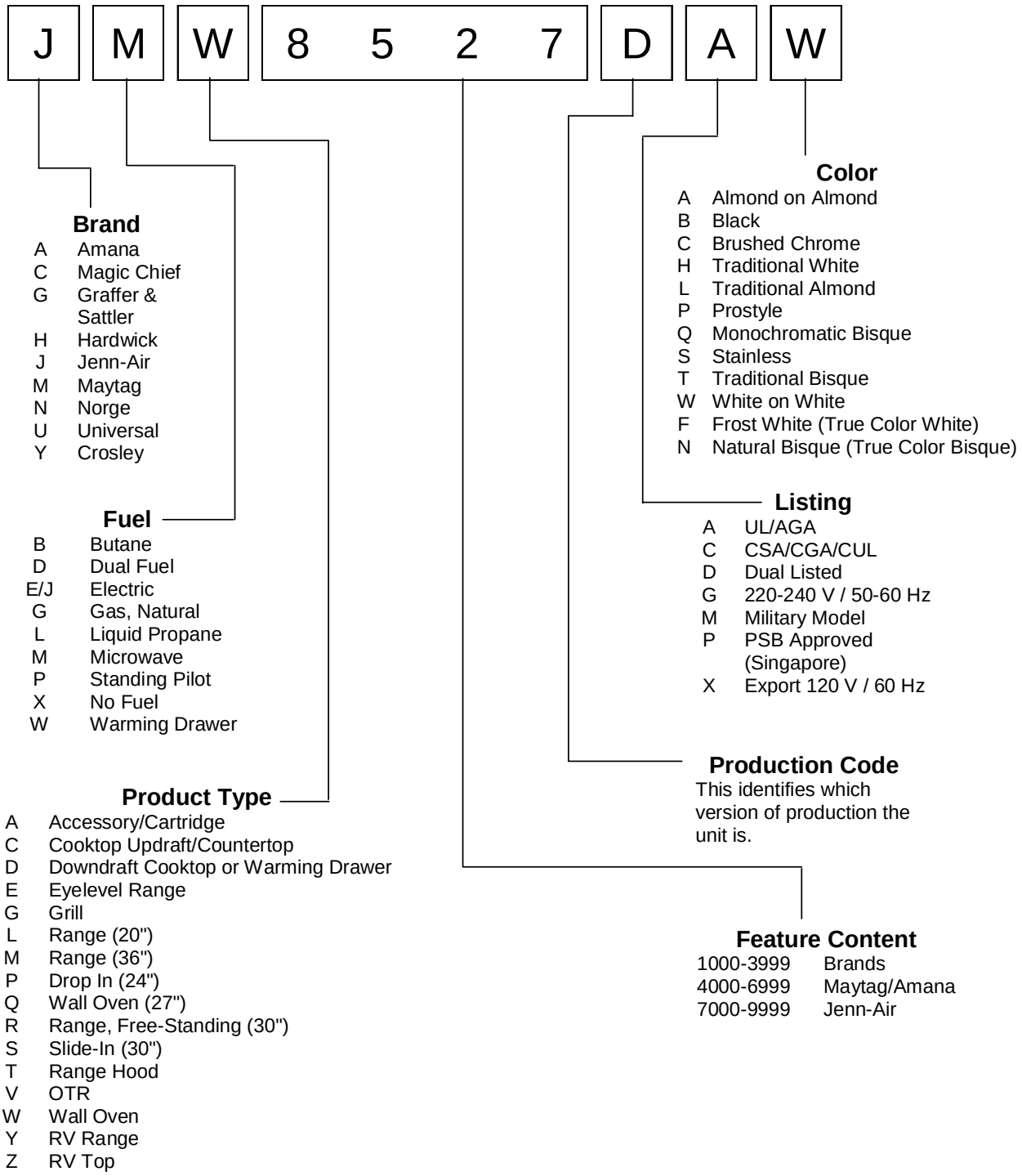

General Information

Rating Label

Model numbers are recorded on the rating label. Rating label is located on under the control panel on the right hand side. It can be seen by opening the oven door. Before ordering parts, write down the correct model and serial number from rating label. This avoids incorrect shipments and delays. Please refer to parts reference material when ordering replacement parts.

Functional Operation

Bake

Top and bottom elements operate during bake. Bake can be used to cook foods which are normally baked. Oven must be preheated.

Bake

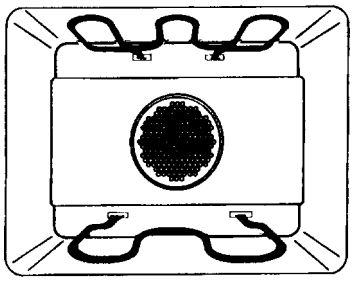

Broil

Top element operates during broil. Broil can be used to cook foods which are normally broiled. Preheating is not required when using broil. All foods should be turned at least once except fish, which does not need to be turned.

Broil

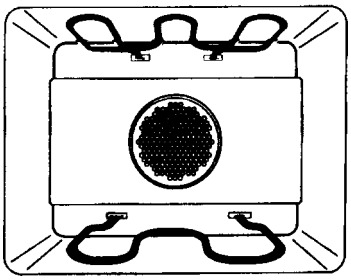

Convection Bake (some models)

Upper element, lower element, and fan operate during convection bake. Convection bake should be used for cooking casseroles and roasting meats. Oven should be preheated for best results when using convection bake. Pans do not need to be staggered.

Convection Bake

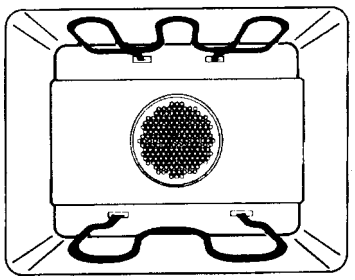

Convection Broil (some models)

Top element and fan operate when using convection broil. Convection broil can be used to cook foods that are normally broiled. Oven does not require preheating when using convection broil. Food does not need to be turned during cooking.

Convection Broil

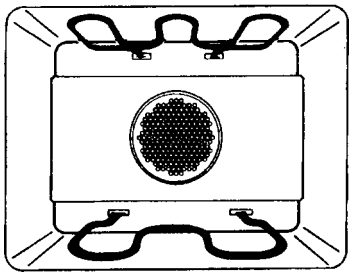

Convection (some models)

Rear element and fan operate during convection. Convection should be used for cooking pastries, souffles, yeast bread, cakes and cookies. Oven should be preheated for best results when using convection. Pans do not need to be staggered.

Convection

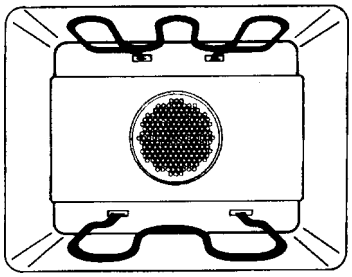

Cooking Guide

Refer to owners manual, for following recommendations only as a guide for times and temperature. Times, rack position, and temperatures may vary depending on conditions and food type. For best results, always check food at minimum time. When roasting, choose rack position based on size of food item.

©2004 Maytag Appliances Company

General Information

Specifications

Refer to individual Technial Sheet for information regarding specifications.

Model Identification

Complete registration card and promptly return. If registration card is missing:

- For Maytag product call 1-800-688-9900 or visit the Web Site at www.maytag.com
- For Jenn-Air product call 1-800-536-6247 or visit the Web Site at www.jennair.com
- For product in Canada call 1-866-587-2002 or visit the Web Sites at www.amana.com or www.maytag.com or www.jennair.com

When contacting provide product information located on rating plate. Record the following:

Model Number: _____
Manufacturing Number: _____
Serial or S/N Number: _____
Date of purchase: _____
Dealer's name and address: _____

Service

Keep a copy of sales receipt for future reference or in case warranty service is required. To locate an authorized servicer:

- For Maytag/Jenn-Air product call 1-800-462-9824 or visit the Web Site at www.maytag.com or www.jennair.com
- For product in Canada call 1-866-587-2002 or visit the Web Sites at www.amana.com or www.maytag.com or www.jennair.com

Warranty service must be performed by an authorized servicer. We also recommend contacting an authorized servicer, if service is required after warranty expires.

Parts and Accessories

Purchase replacement parts and accessories over the phone. To order accessories for your product call:

- For Maytag/Jenn-Air product call 1-800-462-9824 or visit the Web Site at www.maytag.com or www.jennair.com
- For product in Canada call 1-866-587-2002 or visit the Web Sites at www.amana.com or www.maytag.com or www.jennair.com

Extended Service Plan

We offer long-term service protection for this new oven.

- Asure™ Extended Service Plan is specially designed to supplement Amana's strong warranty. This plan covers parts, labor, and travel charges.
  Call 1-866-232-6244 for information.
- Dependability Plus℠ Extended Service Plan is specially designed to supplement Maytag's and Jenn-Air's strong warranty. This plan covers parts, labor, and travel charges.
  Call 1-800-925-2020 for information.

©2004 Maytag Appliances Company

Wall Oven Troubleshooting Procedures

WARNING

To avoid risk of electrical shock, personal injury or death: disconnect power to oven before servicing, unless testing requires it.

Problem	Possible Cause	Correction
No bake element operation	Open bake element Loose wire connection or broken wire	• Check element for continuity, replace if failed. • Verify all connections are clean and tight, replace broken wire.
No broil element operation	Open broil element Loose wire connection or broken wire	• Check element for continuity, replace if failed. • Verify all connections are clean and tight, replace broken wire.
Oven not operating	Programming error Power outage	• Shut off power to oven for five minutes by switching off ciruit breaker. Reset circuit breaker and try oven again. • Verify power is present at unit. Verify that the circuit breaker is not tripped. • Replace household fuse, but do not fuse capacity.
Clock and timer not working	Power outage	• Verify power is present at unit. Verify that the circuit breaker is not tripped. • Replace household fuse, but do not fuse capacity. • Refer to Use and Care Manual “Operating Instructions”, if continues contact service.
Oven light does not operate	Failed oven lamp Failed wiring Failed light socket Failed light plunger	• Check lamp and replace is necessary. • Check for broken, loose or dirty connections. • Check light socket for continuity. • Check plunger for continuity.
Self-clean cycle not working	Programming error	• Shut off power to oven for five minutes by switching off ciruit breaker. Reset circuit breaker and try oven again.
Oven door will not unlock	Oven is self-cleaning Oven is still hot	• Allow cycle to complete. • Will not unlock until unit has cooled to safe temperature. Do not force door open, this will void warranty. Blow cool air on door latch area to quicken process.
Oven smokes/order first few times of usage	Normal	• Minor smoking or order is normal the first few times of oven usage. • Ventilate area well and perform self-clean cycle.
Failure Codes	Electronically Controlled	• Refer to specific Technical Sheet for diagnostic checks.

©2004 Maytag Appliances Company

Microwave Troubleshooting Procedures

WARNING

To avoid risk of electrical shock, personal injury or death: disconnect power to oven before servicing, unless testing requires it.

CAUTIONS

1. Check grounding before checking for trouble.
2. Be careful of the high voltage circuit.
3. Discharge the high voltage capacitor.
4. When checking the continuity of the switches or of the high voltage transformer, disconnect one lead wire from these parts and then check continuity with the AC plug removed. To do otherwise may result in a false reading or damage to your meter.
5. Do not touch any part of the circuit on the P.C.B. since static electric discharge may damage this control panel.
   Always touch yourself to ground while working on this panel to discharge any static charge built up in your body.

CONDITION	CAUSE	REMEDY
Microwave oven does not work.	Inserting many plugs into one outlet and using them at the same time. (blown fuse or breaker)	Avoid using other electrical appliances when you use the microwave oven.
	Microwave oven plug is not inserted tightly.	Insert microwave oven plug securely.
Output power is too low.	Low AC input voltage.	Use the microwave oven at adequate line voltage.
	Food temperature is too low.	This may not be a defect. It is possible that the food should be cooked for a longer time period.
Sparks occur.	Using metallic ware and allowing it to touch the oven wall.	Do not use metallic ware for cooking except that noted in the cooking guide.
	Ceramic ware trimmed in gold or silver powder is used.	Do not use any type of cookware with metallic trimming.
Uneven cooking.	Inconsistent intensity of microwave by their characteristics.	1. Use plastic wrap or lid. 2. Stir once or twice while cooking soup, cocoa or milk, etc.

Microwave Troubleshooting Procedures

WARNING

To avoid risk of electrical shock, personal injury or death: disconnect power to oven before servicing, unless testing requires it.

(TROUBLE 1) Oven does not operate at all, Display window does not display any figures, and no input is accepted.

CONDITION	CHECK	RESULT	CAUSE	REMEDY
1. Fuse blows.	Check continuity of monitor switch (with door closed).	Continuity.	Malfunction of the monitor switch.	**Replace fuse, primary, monitor, secondary switches, and P.C.B Assembly.**
		No continuity.		
	Replace fuse			
	Check continuity of primary switch and door sensing switch (with door opened)	Continuity.	Shorted contact at the primary switch.	**Replace fuse, primary, monitor, secondary switches, and P.C.B Assembly.**
		No continuity.		
	Disconnect one side of the wire lead connected from transformer to the high voltage capacitor and operate the unit.	Normal.	Failed high voltage capacitor.	Replace high voltage capacitor.
		Fuse blows again	Failed high voltage transformer.	Replace high voltage transformer.

NOTE : All these switches must be replaced at the same time.

2. Fuse does not blow.	Check continuity of thermostat.	No continuity.	Failed thermostat.	Replace thermostat.
		Continuity.		
	Check continuity of power supply cord.	No continuity.	Failed power supply cord.	Replace power supply cord.

©2004 Maytag Appliances Company

Wall Oven Testing Procedures

WARNING

To avoid risk of electrical shock, personal injury or death; disconnect power to oven before servicing, unless testing requires it.

Illustration	Component	Test Procedure	Results
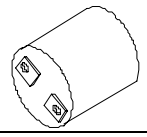	Oven light socket	Test continuity of receptacle terminals. Measure voltage at oven light	Indicates continuity with bulb screwed in. 120 VAC; see wiring diagram for terminal identification. If no voltage is present at oven light check wiring.
	Oven light housing	Disconnect connector and test resistance of terminals..... Measure voltage at oven light	Verify bulb is plugged in properly. Indicates continuity with bulb installed. 12 VAC, see wiring diagram for terminal identification. If no voltage is present at oven light, check wiring or light switches.
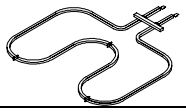	Bake element	Test continuity of terminals ..... Test voltage to terminals.....	2600 W - Approximately 21 Ω - cold 2800 W - Approximately 20 Ω - cold 240 / 208 VAC
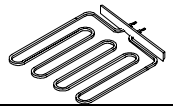	Bake element	Test continuity of terminals ..... Test voltage to terminals.....	Approximately 20 Ω - cold 240 / 208 VAC
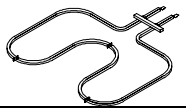	Broil element	Test continuity of terminals ..... Test voltage to terminals.....	Approximately 25 Ω - cold 240 / 208 VAC
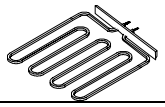	Broil element	Test continuity of terminals ..... Test voltage to terminals.....	Approximately 15 Ω - cold 240 / 208 VAC
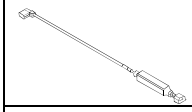	Resistor assembly	Test continuity of resistor	Approximately 41 Ω
	Convection element	Test continuity of terminals ..... Test voltage to terminals.....	Approximately 30 Ω - cold 240 / 208 VAC
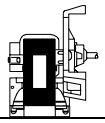	Convection motor fan	Verify supply voltage..... Check continuity of terminals, and verify terminals are not shorted to chassis.....	120 VAC Approximately 400 Ω
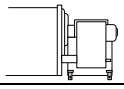	Cooling fan motors	Verify supply voltage..... Check continuity of terminals, and verify terminals not shorted to chassis	120 VAC Continuity
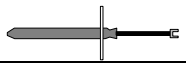	Temperature sensor	Measure resistance.....	Approximately 1080 Ω at room temperature (70°F).
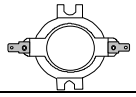	Controls	Verify proper operation.	Open at 260°F, Closes at 200°F Open at 225°F, Closes at 165°F Open at 215°F, Closes at 155°F

Wall Oven Testing Procedures

WARNING

To avoid risk of electrical shock, personal injury or death; disconnect power to oven before servicing, unless testing requires it.

Illustration	Component	Test Procedure	Results
Bottom View 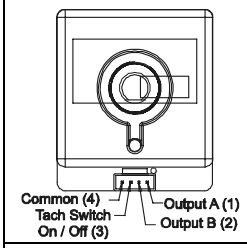 	Rotary encoder 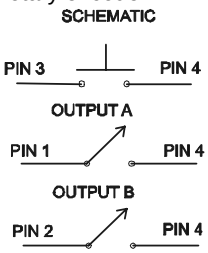 	Test continuity of terminals Pin 3 to Pin 4 ..... Pin 1 to Pin 4 ..... Pin 2 to pin 4.....	 No continuity with switch at rest position. Continuity with switch depressed. No continuity with switch at rest position. Continuity with switch depressed and changes stat as switch is rotated. No continuity with switch at rest position. Continuity with switch depressed and changes stat as switch is rotated.
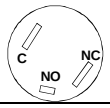 	Door plunger switch	Remove switch from unit and measure the following points: C-NO.....	Plunger in continuity, Plunger out infinite.
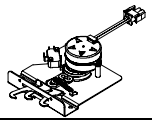	Motorized door latch 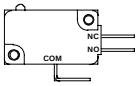 	Switch connection in following positions: Unlocked ..... Locked.....	 COM-NO=Open, COM-NC=Closed COM-NO=Closed, COM-NC=Open
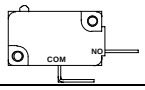 	Door switch	Remove switch from unit and measure the following points: C-NO.....	Plunger in continuity, Plunger out infinite.
Primary **Secondary** 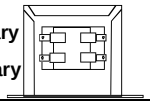	Stepdown transformer	Verify input voltage..... Verify output voltage.....	Approximately 120 VAC Approximately 12 VDC

©2004 Maytag Appliances Company

Wall Oven Testing Procedures

WARNING

To avoid risk of electrical shock, personal injury or death; disconnect power to oven before servicing, unless testing requires it.

H1 Control

Illustration	Component	Test Procedure	Results
H1 Controlled	Oven temperature adjustment	Press ***BAKE*** pad. Enter ***550*** on the digit-pad. Immediately press and hold ***BAKE*** pad for 3 seconds. Oven can be adjusted from -35 to +35 degrees in 5-degree increments by pressing ***AUTOSET*** pad. To avoid over adjusting the oven, move temperature 5 degrees each time. Wait 4 seconds for the data entry timer to expire to accept the change. Temperature adjustment will be retained even through a power failure.	While increasing or decreasing oven temperature, this does not affect self-cleaning temperature.
H1 Controlled	Temperature display	Press and hold ***Cancel*** and ***Bake*** pads for 3 seconds.	This mode enables the user to indicate °F or °C on the display.
H1 Controlled	Clock Display	Press and hold ***Cancel*** and ***Clock*** pads for 3 seconds.	Allows clock to be toggled On or OFF.
H1 Controlled	24 Hour Clock	Press and hold ***Cancel*** and ***Favorite*** pads for 3 seconds.	Allows the time on the clock to be toggled from 12 hour or 24 hour display.
H1 Controlled	Factory Default	Press and hold ***Cancel*** and ***Keep Warm*** pads for 3 seconds.	Allows the clock to be reset to factory settings.
H1 Controlled	Twelve hour off	Control will automatically cancel any cooking operation and remove all relay drives 12 hours after the last pad touch.	See Sabbath mode to disable.
H1 Controlled	Sabbath Mode	Hold ***CLOCK*** pad for 3 seconds to activate Sabbath mode. Hold ***CLOCK*** pad for 3 seconds to disable Sabbath mode.	"SAb" will be displayed and flash for 5 seconds. Display will go back to time of day. All pad inputs are disabled except for CANCEL and CLOCK pads. This mode disables the normal 12 hour shutoff to allow operation of the bake mode for a maximum of 72 hours.
H1 Controlled	Child lock out	Press and hold ***Cancel*** and ***Cook & Hold*** pads for 3 seconds. **"OFF"** will display where the temperature normally appears. "**LOCK**" will display flashing while door is locking. To reactivate the control, press and hold ***Cancel*** and ***Cook & Hold*** pads for 3 seconds.	This is a safety feature that can be used to prevent children from accidentally programming the oven. It disables the electronic oven control. Child lockout features must be reset after a power failure.
H1 Controlled	Diagnostic Code Display	See "Quick Test Mode". Cycle through the codes using the number pads 1 through 5.	The last 5 diagnostic codes will be stored in the non-volatile memory. See **"Description of Error Codes"** for explanation.

Wall Oven Testing Procedures

WARNING

To avoid risk of electrical shock, personal injury or death; disconnect power to oven before servicing, unless testing requires it.

Jenn-Air Matrix
Control Panel Assembly

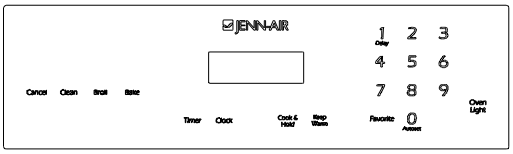

Continuity is indicated as follows:
1000 – 6600 Ω for Cancel pad
1000 – 15000 Ω for All other pads

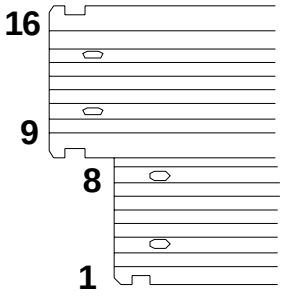

Pad	Trace	Measurement
1	13 & 15	Continuity
2	12 & 15	Continuity
3	10 & 15	Continuity
4	7 & 13	Continuity
5	12 & 13	Continuity
6	10 & 12	Continuity
7	4 & 13	Continuity
8	4 & 12	Continuity
9	5 & 10	Continuity
0	5 & 12	Continuity
Cancel	1 & 2/3	Continuity
Clock	4 & 14	Continuity
Cook & Hold	5 & 14	Continuity
Broil	13 & 14	Continuity
Bake	7 & 15	Continuity
Clean	5 & 7	Continuity
Keep Warm	14 & 15	Continuity
Favorite	5 & 13	Continuity
Timer	4 & 5	Continuity
Oven Light	4 & 10	Continuity

Maytag Matrix
Control Panel Assembly

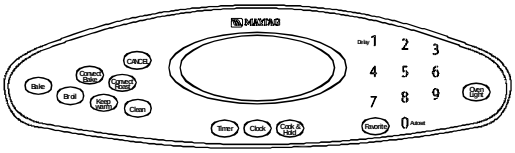

Continuity is indicated as follows:
1000 – 6600 Ω for Cancel pad
1000 – 15000 Ω for All other pads

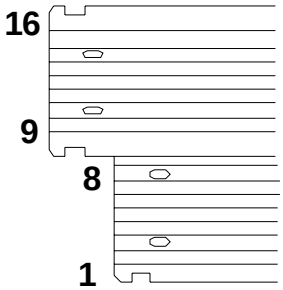

Pad	Trace	Measurement
1	13 & 15	Continuity
2	12 & 13	Continuity
3	12 & 15	Continuity
4	4 & 11	Continuity
5	4 & 12	Continuity
6	4 & 10	Continuity
7	5 & 11	Continuity
8	5 & 13	Continuity
9	5 & 10	Continuity
0	5 & 12	Continuity
Cancel	1 & 3	Continuity
Clock	7 & 13	Continuity
Cook & Hold	11 & 13	Continuity
Broil	11 & 12	Continuity
Bake	10 & 11	Continuity
Convect Bake	11 & 15	Continuity
Convect Roast	5 & 7	Continuity
Clean	4 & 13	Continuity
Keep Warm	7 & 11	Continuity
Favorite	4 & 5	Continuity
Timer	4 & 7	Continuity
Oven Light	10 & 12	Continuity

©2004 Maytag Appliances Company

Wall Oven Testing Procedures

WARNING

To avoid risk of electrical shock, personal injury or death; disconnect power to oven before servicing, unless testing requires it.

Relay Logic

Note that this chart was correct at time of printing; subsequent changes to cooking parameters may alter it.

COOKING MODE	BAKE	BROIL	CONVECT ELEMENT	CONVECT FAN	COOLING FAN	OVEN LIGHT
IDLE	✕	✕	✕	✕	✇	◈
BAKE PREHEAT	■	■	✕	✕	✇	◈
BAKE	■	■	✕	✕	✇	◈
BROIL PREHEAT	✕	■	✕	✕	✇	◈
BROIL	✕	■	✕	✕	✇	◈
CLEAN PREHEAT	■	■	✕	✕	✇	✕
CLEAN	■	■	✕	✕	✇	✕
KEEP WARM	■	✕	✕	✕	✇	◈
CONVECT BAKE PREHEAT	■	■	■	■	✇	◈
CONVECT BAKE	■	■	■	■	✇	◈
CONVECT ROAST PREHEAT	■	■	■	■	✇	◈
CONVECT ROAST	■	■	■	■	✇	◈
PROOFING PREHEAT	■	✕	✕	✕	✇	◈
PROOFING	■	✕	✕	✕	✇	◈
DRYING PREHEAT	■	✕	✕	✕	✇	◈
DRYING	■	✕	✕	✕	✇	◈

KEY INDEX

✕ - OFF
● - ON
■ - CYCLING
◈ - ON OR OFF (DETERMINED BY USER INPUT)
✇ - TEMPERATURE CONTROLLED

Wall Oven Testing Procedures

WARNING

To avoid risk of electrical shock, personal injury or death; disconnect power to oven before servicing, unless testing requires it.

"Quick Test" Mode for Electronic Range Control

Follow procedure below to use the quick test mode. Entries must be made within 32 seconds of each other or the control will exit the quick test mode.

1. **Press and hold** *CANCEL* and *BROIL* pads for 3 seconds.
2. Once the control has entered the "Quick Test" mode, release both pads.
3. Press each of the following pads indicated in the table below.

NOTE: First time one of following pads are pressed it will activate the response.
The second time the pad is pressed it will deactivate the response.

Display will indicate the following:

Pad	Response
BAKE	Bake DLB and Bake relay activated
BROIL	Broil DLB and Broil relay activated
KEEP WARM	Bake DLB and Broil DLB activated
CONVECT BAKE	Convection Fan on high speed
CONVECT ROAST	Cooling Fan activated
CLEAN	MDL relay activated
COOK & HOLD	Displays last diagnostic code
FAVORITE	Displays EEPROM version number
TIMER	Displays main code version number
CLOCK	All display segments illuminated
OVEN LIGHT	Oven light activated
CANCEL	Exit Quick Test mode
1	Even segments on
2	Odd segments on
3	Convection Ring activated; Convection Ring DLB activated
4	Bake relay activated
5	Broil relay activated
6	Convection relay activated
7	N/A
8	N/A
9	N/A
AUTOSET	Steps through last 5 diagnostic codes

Description of Error Codes

Error diagnostic codes can only be viewed by entering the Diagnostic Code Display Mode.
Each error code is four digits long and is created based on the following table.

Digit	Description	
1st	Primary System:	1 – Local to the control circuit board 3 – Sensor or meat probe 4 – Control input 9 – Door lock
2nd	Measurable:	d – Diagnostic: measurable parameter c – Control related, replace control
3rd	Secondary System:	Sequential numbering
4th	Oven Cavity:	1 – Upper oven (or single cavity oven) 2 – Lower oven c – Control specific

Diagnostic Code Display Mode can be activated by **pressing and holding** the *AUTOSET* pad for 3 seconds at power-up. **Diagnostic Code Display Mode can only be started while powering up the control.**

©2004 Maytag Appliances Company

Wall Oven Testing Procedures

WARNING

To avoid risk of electrical shock, personal injury or death; disconnect power to oven before servicing, unless testing requires it.

Diagnostic Code Checking

Code	Description	When Checked	Detection
1c1c	Shorted key	Always	1 minute
1c2c	Keyboard tail disconnected	Always	1 minute
1c31	Cancel key circuit problem	Always	20 seconds
1c32	Cancel key circuit problem	Always	20 seconds
1c6c	EEPROM error	When accessing EEPROM	3 tries
1c7c	Control not calibrated	Always	3 tries
1c8c	Cooking program error	Cook or clean programmed	3 tries
1d11	Runaway temp (650°F), door unlocked	Latch unlocked	1 minute
1d12	Runaway temp (650°F), door unlocked	Latch unlocked	1 minute
1d21	Runaway temp (950°F), door locked	Latch locked	1 minute
1d22	Runaway temp (950°F), door locked	Latch locked	1 minute
3d11	Sensor open	Cook or clean active	20 seconds
3d12	Sensor open	Cook or clean active	20 seconds
3d21	Sensor shorted	Cook or clean active	20 seconds
3d22	Sensor shorted	Cook or clean active	20 seconds
4d11	Door switch position failure	Clean or keyboard Lockout active	1 minute
4d12	Door switch position failure	Clean or keyboard Lockout active	1 minute
4d21	No reverse airflow fan rotation (no/low RPM)	Clean or Cook programmed	1 minute
4d31	Reverse airflow fan state (on when should be off)	Suppose to be OFF	1 minute
4d51	Door switch circuit failure	Convect, Clean or Keyboard Lockout programmed	1 minute
4d52	Door switch circuit failure	Convect, Clean or Keyboard Lockout programmed	1 minute
9d11	Latch will not lock	Latch should be locked	See Note [6]
9d12	Latch will not lock	Latch should be locked	See Note [6]
9d21	Latch will not unlock	Latch should be unlocked	See Note [6]
9d22	Latch will not unlock	Latch should be unlocked	See Note [6]
9d31	Latch state unknown, both locked and unlocked	Latch should be locked or when lock attempted	See Note [6]
9d32	Latch state unknown, both locked and unlocked	Latch should be locked or when lock attempted	See Note [6]

Diagnostic Code Handling

Code	Measurable	What is Displayed	Action Taken By Control
1c1c	Keypress	Nothing	Disables audible for affected key depression Disables all outputs [1, 2] Disables lights and timers
1c2c	Keyboard loop improper value	Nothing	Disables audible for key depression Disables all outputs [1] Disables lights and timers
1c31	Cancel key improper value	BAKE flashes [3]	Disables all outputs for cavity [1]
1c32	Cancel key improper value	BAKE flashes [3]	Disables all outputs for cavity [1]
1c6c	No response from EEPROM	Nothing	Disables all outputs [1]
1c7c	Calibration value out of range	"CAL" in the time digits	Completely disables oven [4]
1c8c	CRC invalid	Nothing	Cancels active cook function
1d11	Sensor resistance > 2237 Ω	BAKE flashes [3]	Disables all cook function for cavity
1d12	Sensor resistance > 2237 Ω	BAKE flashes [3]	Disables all cook function for cavity
1d21	Sensor resistance > 2787 Ω	BAKE flashes [3]	Disables all cook function for cavity
1d22	Sensor resistance > 2787 Ω	BAKE flashes [3]	Disables all cook function for cavity
3d11	Sensor resistance > Infinite Ω	BAKE flashes [3]	Disables all cook function for cavity
3d12	Sensor resistance > Infinite Ω	BAKE flashes [3]	Disables all cook function for cavity
3d21	Sensor resistance > 0 Ω	BAKE flashes [3]	Disables all cook function for cavity
3d22	Sensor resistance > 0 Ω	BAKE flashes [3]	Disables all cook function for cavity
4d11	Door switch not closed when door is locked	Nothing	Disables Clean and Lockout functions [5]
4d12	Door switch not closed when door is locked	Nothing	Disables Clean and Lockout functions [5]
4d21	No reverse airflow fan rotation (no/low RPM)	Nothing	Disables all cook function for cavity
4d31	Reverse airflow fan state (on when should be off)	Nothing	No action
4d51	Door switch not open or closed	Nothing	Disables Convect, Clean, and Lockout functions [4, 5] Turn off light and disable light from door switch
4d52	Door switch not open or closed	Nothing	Disables Convect, Clean, and Lockout functions [4, 5] Turn off light and disable light from door switch
9d11	Lock switch not closed	LOCK flashes [3]	Disables Clean and Lockout functions [4]
9d12	Lock switch not closed	LOCK flashes [3]	Disables Clean and Lockout functions [4]
9d21	Unlock switch not closed	LOCK flashes [3]	Disables Clean and Lockout functions [4]
9d22	Unlock switch not closed	LOCK flashes [3]	Disables Clean and Lockout functions [4]
9d31	Latch both locked and unlocked	LOCK flashes [3]	Disables Clean and Lockout functions [4]
9d32	Latch both locked and unlocked	LOCK flashes [3]	Disables Clean and Lockout functions [4]

Wall Oven Testing Procedures

WARNING

To avoid risk of electrical shock, personal injury or death; disconnect power to oven before servicing, unless testing requires it.

NOTES:

1 "Action Taken" applies as long as the condition exists. If the condition goes away, the control recovers.

2 If there is a cook function or timer active, the function continues. The user cannot edit the function, and [Cancel] will cancel the cook mode.

3 Flash rate: 0.2 seconds on, 0.1 second off. Pressing any key will clear the display until the fault clears and is re-triggered.

4 "Action Taken" applies until there is a POR (Power On Reset ["hard reset"]).

5 If the control believes the door is locked, it will attempt to unlock it when the function cancels and the cavity temperature cools.

6 Special conditions for latch faults (9dxx):

- A known good **unlock** position is defined as when the unlock switch reads closed and lock switch reads open.
- A known good **lock** position is defined as when the unlock switch reads open and lock switch reads closed.
- A **faulted switch** means the switch input is reading an invalid state, neither open nor closed.
- Once a latch fault occurs, latch movement is disabled until there is a POR. An error tone will sound if a function requiring a faulted latch is attempted.
- If at POR, the latch is not at a known good unlock position:
  - If the latch is at a good lock position, it will attempt to unlock when the RTD (Resistance Temperature Device) temperature is below 400°F.
  - If the latch is not at a good lock position, the control will fault.
- If a latch fault occurs while the RTD is above the lock temperature, the latch will not try to move, but the fault is still logged to EEPROM after the first stage of detection.
- The Display column for latch faults applies 1) If the latch was moving when the fault occurred; 2) If the latch is already in a known locked state when the fault occurs.
  - LOCK flashes after a fault is detected and until the unlocked position is achieved. The unlock position may be identified by a successful unlock switch closure, or as the result of timing when the unlock switch is not functioning properly.
- If the last known good position was unlock (e.g. baking, or idle) and a latch fault occurs, the motor is never moved. The fault is logged to EEPROM and is not seen by the user.
- The detection for latch faults is in two stages. The first stage is to let the control recover without moving the latch. After this:
  - If the latch was previously at a known good unlock position, the latch will not move and the control will fault.
  - If the control was previously in a known good lock position:
    - If the RTD is below 400°F, the latch will attempt to recover to it's proper position (up to three revolutions). If it cannot, the control will fault and the latch will move to a calculated unlock position.
    - If the RTD is at or above 400°F, the control will fault. When the RTD cools to below 400°F, the control will attempt to recover to a good unlock position (up to three revolution). If it cannot, the control will fault and the latch will move to a calculated unlock position.
    - **Note:** If the unlock position cannot be found, this may result in a second fault, the first fault occurring when the latch request was locked, and the second when the latch request is unlocked.
  - If the latch is moving when the fault occurs, the control will bypass the first stage of detection and immediately try to find it's proper position. If it cannot, the control will fault and the latch will move to a calculated unlock position.
- Affected DLBs (Double Line Breaks) and loads are disabled during detection.
- If the control is in a known good unlock position and the lock switch becomes faulted:
  - The control will not fault.
  - If a function requiring latch movement is attempted while the lock switch is faulted, the control will sound an error tone and the function will be disabled.
- If the control is in a known good lock position and the unlock switch becomes faulted:
  - The control will not fault.
  - After the function is canceled and unlock is attempted, the control will attempt to unlock the latch according to the procedures in these notes.

©2004 Maytag Appliances Company

Wall Oven Testing Procedures

WARNING

To avoid risk of electrical shock, personal injury or death; disconnect power to oven before servicing, unless testing requires it.

UH1/2 Control

Illustration	Component	Test Procedure	Results
UH1/2 Controlled	Oven temperature adjustment	Press ***SETUP*** pad. Press ***DOWN ARROW*** to scroll down to ***TEMP ADJUST***. Select oven and enter desired temperature change. Press ***ENTER*** pad to accept the change. Oven can be adjusted from -35 to +35 by pressing ***+/-*** pad. To avoid over adjusting the oven, move temperature 5 degrees each time. Wait 4 seconds for the data entry timer to expire to accept the change.	While increasing or decreasing oven temperature, this does not affect broiling or self-cleaning temperature. The oven offset does not need to be readjusted if there is a power failure. Temperature adjustment will be retained even through a power failure.
UH1/2 Controlled	Temperature display	Press ***SETUP*** pad and use the arrow pad to scroll to the next screen. Select C/F, then select ***SET***. Press ***SETUP*** pad to exit.	This mode enables the user to indicate °F or °C on the display.
UH1/2 Controlled	Clock Display	Press ***SETUP*** pad. Press ***CLOCK*** pad. Press ***TIME*** and enter numeric from key pad. Select ***AM*** or ***PM.*** Press ***SETUP*** to end. Press ***SETUP*** pad. Press ***CLOCK*** pad. Press ***DAY*** pad. Press back forward to select day of week. Press ***SETUP*** to end. Press ***SETUP*** pad. Press ***CLOCK*** pad. Scroll down to ***12/24 HR.*** Scroll down to ***12/24 HR*** format. Select ***SET*** to activate. Press ***SETUP*** pad to exit. Press ***DOWN ARROW*** pad to scroll to ***CLOCK.***	Set clock, day of week, or 12/24 HR clock.
UH1/2 Controlled	12 Hour Shutoff	Press ***SETUP*** pad. Press ***DOWN ARROW*** pad to scroll to ***12 HOUR SHUTOFF*** pad. Select ***ON*** or ***OFF***. Select ***SET*** pad to activate. Press ***SETUP*** pad to exit.	Allows the time on the clock to be toggled from 12 hour or 24 hour display.
UH1/2 Controlled	Demo mode	Press ***SETUP*** pad. Press ***DOWN ARROW*** pad to scroll to ***DEMO*** pad. Select ***DEMO*** to activate. Press ***SETUP*** pad to exit.	Control will automatically cancel any cooking operation and remove all relay drives 12 hours after the last pad touch.
UH1/2 Controlled	Energy Saver	Press ***SETUP*** pad. Press ***DOWN ARROW*** pad to scroll to ***ENERGY SAVER*** pad. Select ***ON*** or ***OFF***. Select ***SET*** pad to activate. Press ***SETUP*** pad to exit.	To save energy, the display will turn off after five minutes of no use in time of day mode only.
UH1/2 Controlled	208/240 V mode	Press ***SETUP*** pad. Press ***DOWN ARROW*** pad to scroll to ***208/240 V*** pad. Select ***208*** or ***240.*** Select ***SET*** pad to activate.	For improved results when using Radiant Bake only, the oven can be set from 240 V to 208 V.
UH1/2 Controlled	Control Lockout	Press and hold ***BACK*** and ***ENTER*** pads for 5 seconds. To reactivate the control, press and hold ***BACK*** and ***ENTER*** pads for 5 seconds.	This is a safety feature that can be used to prevent accidentally programming the oven. It disables the electronic oven control and locks the cavity door(s). Control lockout features must be reset after a power failure.
UH1/2 Controlled	Sabbath Mode The time of day and day of week must be set correctly for this feature to be activated.	Press ***SETUP*** pad. Press ***DOWN ARROW*** pad. Press ***SABBATH*** pad to activate Sabbath mode. Select ***AUTO*** or ***MANUAL*** pad. If ***AUTO*** selected, press continue. If ***MANUAL*** selected, press ***ON*** or ***OFF.*** Select ***SET*** pad.	**Auto-Sabbath mode** will display a reminder at 2:00 PM on Friday. **Manual-Sabbath mode** will be instantly programmed for 72 hours. This mode disables the normal 12 hour energy saving mode.

Wall Oven Testing Procedures

WARNING

To avoid risk of electrical shock, personal injury or death; disconnect power to oven before servicing, unless testing requires it.

Test Mode

Follow procedure below to access the Test Mode.

1. Press ***SETUP*** pad.
2. Press ***DOWN ARROW*** pad three times until ***SERVICE*** is displayed.
3. Press ***SERVICE*** pad.
4. Press and hold ***BACK*** and ***ENTER*** pads for 5 seconds.
5. Press ***TEST*** pad.

NOTE: If the oven cavity temperature is greater then 400°F, the Test Mode cannot be activated or will abort the mode if activated.

NOTE: Once the Test Mode is activated and a function is selected the control will activate the relay until the pad is pressed again. Upon entering TEST Mode all relays are turned off except the DLB relays, which are turned on. All relays are turned off when the TEST Mode is exited.

Pad Pressed	Relay or Action Activated
Beep	1 Second Beep
Version	Version of software
Last Fault	Display last error code and oven configuration (single, double, convection, nonconvection)
DISP Test	Display segments
UBAKE	Upper Bake Element
UBROIL	Upper Broil Element
UCONV	Upper Convection Element
UCOOL	Upper Cooling Fan
UCONV-H	Upper High Speed Convection Fan
UCONV-L	Upper Low Speed Convection Fan
UMDL	Upper Motorized Door Lock
ULITE	Upper Oven Light
LBAKE	Lower Bake Element
LBROIL	Lower Broil Element
LCONV	Lower Convection Element
LCOOL	Lower Cooling Fan
LCONV-H	Lower High Speed Convection Fan
LCONV-L	Lower Low Speed Convection Fan
LMDL	Lower Motorized Door Lock
LLITE	Lower Oven Light

©2004 Maytag Appliances Company

Wall Oven Testing Procedures

WARNING

To avoid risk of electrical shock, personal injury or death; disconnect power to oven before servicing, unless testing requires it.

Description of Error Codes

Error diagnostic codes can only be viewed by entering the Diagnostic Code Display Mode.
Each error code is four digits long and is created based on the following table.

Digit	Description	
1st	Primary System:	1 – Local to the control circuit board 3 – Sensor or meat probe 4 – Control input 9 – Door lock
2nd	Measurable:	d – Diagnostic failure: measurable parameter c – Control related error, replace control
3rd	Primary failure mechanism	
4th	Oven Cavity:	1 – Upper oven (or single cavity oven) 2 – Lower oven c – Control specific

Diagnostic Code Checking

Code	Description	When Checked	Detection
1c1c	Shorted key	Always	1 minute
1c2c	Keyboard tail disconnected	Always	1 minute
1c31	Cancel key circuit problem	Always	20 sec
1c32	Cancel key circuit problem	Always	20 sec
1c4c	Power micro communication failure	Always	20 sec
1c6c	EEPROM error	When accessing EEPROM	3 tries
1c7c	Control not calibrated	Always	3 tries
1c81	Cook profile corrupted in EEPROM	Cook or clean programmed	3 tries
1c82	Cook profile corrupted in EEPROM	Cook or clean programmed	3 tries
1d11	Runaway temperature (650°F), door unlocked	Latch unlocked	1 minute
1d12	Runaway temperature (650°F), door unlocked	Latch unlocked	1 minute
1d21	Runaway temperature (950°F), door locked	Latch locked	1 minute
1d22	Runaway temperature (950°F), door locked	Latch locked	1 minute
3d11	Temperature sensor failure (open)	Cook or Clean active	20 sec
3d12	Temperature sensor failure (open)	Cook or Clean active	20 sec
3d21	Temperature sensor failure (short)	Cook or Clean active	20 sec
3d22	Temperature sensor failure (short)	Cook or Clean active	20 sec
3d41	Meat probe shorted	Probe cook programmed	20 sec
3d51	Meat probe not calibrated	Always	3 sec
4d11	Door switch position failure	Clean or Keyboard Lockout active	1 minute
4d12	Door switch position failure	Clean or Keyboard Lockout active	1 minute
4d21	No Reverse Airflow Fan rotation (no/low RPM)	Cook or Clean programmed	1 minute
4d22	No Reverse Airflow Fan rotation (no/low RPM)	Cook or Clean programmed	1 minute
4d31	Reverse Airflow Fan state error (on when supposed to be off)	When supposed to be off	1 minute
4d32	Reverse Airflow Fan state error (on when supposed to be off)	When supposed to be off	1 minute
4d41	High Reverse Airflow Fan rotation, high RPM	Cook or Clean programmed	1 minute
4d42	High Reverse Airflow Fan rotation, high RPM	Cook or Clean programmed	1 minute
4d51	Door switch circuit failure	Convect, Clean, or Keyboard Lockout programmed	1 minute
4d52	Door switch circuit failure	Convect, Clean, or Keyboard Lockout programmed	1 minute
9d11	Latch will not lock [6]	Latch should be locked	See note 6
9d12	Latch will not lock [6]	Latch should be locked	See note 6
9d21	Latch will not unlock [6]	Latch should be unlocked	See note 6
9d22	Latch will not unlock [6]	Latch should be unlocked	See note 6
9d31	Latch both locked and unlocked [6]	Latch should be locked or when lock attempted	See note 6
9d32	Latch both locked and unlocked [6]	Latch should be locked or when lock attempted	See note 6

Wall Oven Testing Procedures

WARNING

To avoid risk of electrical shock, personal injury or death; disconnect power to oven before servicing, unless testing requires it.

Diagnostic Code Handling

Code	Measured	Display	Action Taken
1c1c	Keypress		Disable audible for affected key depression, Disable all outputs [1, 2] Disable lights and timers
1c2c	Keyboard loop improper value		Disable audible for key depression, Disable all outputs [1] Disable lights and timers
1c31	Cancel key improper value	mssg 1 (active) / mssg 2 (data)	Disable all outputs for cavity [1]
1c32	Cancel key improper value	mssg 1 (active) / mssg 2 (data)	Disable all outputs for cavity [1]
1c4c	CRC invalid	mssg 1 (active) / mssg 2 (data)	Disable all outputs [1]
1c6c	No response from EEPROM	mssg 1 (active) / mssg 2 (data)	Disable all outputs [1]
1c7c	Calibration value out of range	mssg 1 (active) / mssg 2 (data)	Completely disable oven [4]
1c81	CRC invalid	mssg 1 (active) / mssg 2 (data)	Disable affected oven function [1]
1c82	CRC invalid	mssg 1 (active) / mssg 2 (data)	Disable affected oven function [1]
1d11	Sensor resistance >2237 Ω	mssg 1 (active) / mssg 3 (data)	Disable all cooking functions for cavity
1d12	Sensor resistance >2237 Ω	mssg 1 (active) / mssg 3 (data)	Disable all cooking functions for cavity
1d21	Sensor resistance >2787 Ω	mssg 1 (active) / mssg 3 (data)	Disable all cooking functions for cavity
1d22	Sensor resistance >2787 Ω	mssg 1 (active) / mssg 3 (data)	Disable all cooking functions for cavity
3d11	Sensor resistance > Infinite Ω	mssg 1 (active) / mssg 2 (data)	Disable all cooking functions for cavity
3d12	Sensor resistance > Infinite Ω	mssg 1 (active) / mssg 2 (data)	Disable all cooking functions for cavity
3d21	Sensor resistance < 0 Ω	mssg 1 (active) / mssg 2 (data)	Disable all cooking functions for cavity
3d22	Sensor resistance < 0 Ω	mssg 1 (active) / mssg 2 (data)	Disable all cooking functions for cavity
3d41	Probe resistance < 0 Ω	mssg 1 (active) / mssg 2 (data)	Disable all probe functions
3d51	Calibration value out of range	mssg 2	Disable all probe functions
4d11	Door switch not closed when door is locked	mssg 1	Disable Clean and lockout functions [5]
4d12	Door switch not closed when door is locked	mssg 1	Disable Clean and lockout functions [5]
4d21	Reverse Airflow Fan rotation (no/low RPM)	mssg 1 (active) / mssg 2 (data)	Disable all cooking functions for cavity
4d22	Reverse Airflow Fan rotation (no/low RPM)	mssg 1 (active) / mssg 2 (data)	Disable all cooking functions for cavity
4d31	Reverse Airflow Fan rotation (on when should be off)	No change	No action
4d32	Reverse Airflow Fan rotation (on when should be off)	No change	No action
4d41	Reverse Airflow Fan rotation (high RPM)	mssg 1 (active) / mssg 2 (data)	Disable all cooking functions for cavity
4d42	Reverse Airflow Fan rotation (high RPM)	mssg 1 (active) / mssg 2 (data)	Disable all cooking functions for cavity
4d51	Door switch not open or closed	mssg 1 (active) / mssg 2 (data)	Disable Convect, Clean, and lockout functions [4, 5] Turn off light and disable light from door switch
4d52	Door switch not open or closed	mssg 1 (active) / mssg 2 (data)	Disable Convect, Clean, and lockout functions [4, 5] Turn off light and disable light from door switch
9d11	Lock switch not closed	mssg 1 (active) / mssg 2 (data)	Disable Clean and lockout functions [4]
9d12	Lock switch not closed	mssg 1 (active) / mssg 2 (data)	Disable Clean and lockout functions [4]
9d21	Unlock switch not closed	mssg 1 (active) / mssg 2 (data)	Disable Clean and lockout functions [4]
9d22	Unlock switch not closed	mssg 1 (active) / mssg 2 (data)	Disable Clean and lockout functions [4]
9d31	Lock and unlock switches both closed	mssg 1 (active) / mssg 2 (data)	Disable Clean and lockout functions [4]
9d32	Lock and unlock switches both closed	mssg 1 (active) / mssg 2 (data)	Disable Clean and lockout functions [4]

Message 1:	Message 2:	Message 3:
FAULT DETECTED PRESS ENTER TO TRY AGAIN	FEATURE NOT AVAILABLE PRESS HELP	FAULT DETECTED DISABLE POWER TO CLEAR

©2004 Maytag Appliances Company

Wall Oven Testing Procedures

WARNING

To avoid risk of electrical shock, personal injury or death; disconnect power to oven before servicing, unless testing requires it.

NOTES:

1 "Action Taken" applies as long as the condition exists. If the condition goes away, the control recovers.

2 If there is a cook function or timer active, the function continues. The user cannot edit the function, and [Cancel] will cancel the cook mode.

3 Flash rate: 0.2 seconds on, 0.1 second off. Pressing any key will clear the display until the fault clears and is re-triggered.

4 "Action Taken" applies until there is a POR (Power On Reset ["hard reset"]).

5 If the control believes the door is locked, it will attempt to unlock it when the function cancels and the cavity temperature cools.

6 Special conditions for latch faults (9dxx):

- A known good **unlock** position is defined as when the unlock switch reads closed and lock switch reads open.
- A known good **lock** position is defined as when the unlock switch reads open and lock switch reads closed.
- A **faulted switch** means the switch input is reading an invalid state, neither open nor closed.
- Once a latch fault occurs, latch movement is disabled until there is a POR. An error tone will sound if a function requiring a faulted latch is attempted.
- If at POR, the latch is not at a known good unlock position:
  - If the latch is at a good lock position, it will attempt to unlock when the RTD (Resistance Temperature Device) temperature is below 400°F.
  - If the latch is not at a good lock position, the control will fault.
- If a latch fault occurs while the RTD is above the lock temperature, the latch will not try to move, but the fault is still logged to EEPROM after the first stage of detection.
- The Display column for latch faults applies 1) If the latch was moving when the fault occurred; 2) If the latch is already in a known locked state when the fault occurs.
  - LOCK flashes after a fault is detected and until the unlocked position is achieved. The unlock position may be identified by a successful unlock switch closure, or as the result of timing when the unlock switch is not functioning properly.
- If the last known good position was unlock (e.g. baking, or idle) and a latch fault occurs, the motor is never moved. The fault is logged to EEPROM and is not seen by the user.
- The detection for latch faults is in two stages. The first stage is to let the control recover without moving the latch. After this:
  - If the latch was previously at a known good unlock position, the latch will not move and the control will fault.
  - If the control was previously in a known good lock position:
    - If the RTD is below 400°F, the latch will attempt to recover to it's proper position (up to three revolutions). If it cannot, the control will fault and the latch will move to a calculated unlock position.
    - If the RTD is at or above 400°F, the control will fault. When the RTD cools to below 400°F, the control will attempt to recover to a good unlock position (up to three revolution). If it cannot, the control will fault and the latch will move to a calculated unlock position.
    - **Note:** If the unlock position cannot be found, this may result in a second fault, the first fault occurring when the latch request was locked, and the second when the latch request is unlocked.
  - If the latch is moving when the fault occurs, the control will bypass the first stage of detection and immediately try to find it's proper position. If it cannot, the control will fault and the latch will move to a calculated unlock position.
- Affected DLBs (Double Line Breaks) and loads are disabled during detection.
- If the control is in a known good unlock position and the lock switch becomes faulted:
  - The control will not fault.
  - If a function requiring latch movement is attempted while the lock switch is faulted, the control will sound an error tone and the function will be disabled.
- If the control is in a known good lock position and the unlock switch becomes faulted:
  - The control will not fault.
  - After the function is canceled and unlock is attempted, the control will attempt to unlock the latch according to the procedures in these notes.

Microwave Testing Procedures

WARNING

To avoid risk of electrical shock, personal injury or death; disconnect power to oven before servicing, unless testing requires it.

Illustration	Component	Test Procedure	Results
	Oven light and socket	Test continuity of receptacle terminals . Measure voltage at oven light.....	Indicates continuity with bulb screwed in. 120 VAC; see wiring diagram for terminal identification. If no voltage is present at oven light check wiring.
	Transformer	**Discharge Capacitor** Remove all wires from terminals. Measure resistance from: Primary Terminals..... Secondary Terminals	 Less than 1 Ω Approximately 85 Ω
	Turntable	Remove all wires from terminals. Measure resistance from: Terminal to terminal.....	 Approximately 2238 Ω
	Magnetron	**Discharge Capacitor** Remove wires from magnetron and connect ohmmeter to terminals. Also check between each terminal and ground.	Between Terminals: Less than 1 Ω Each terminal to ground measures Infinite resistance. **Note:** This test is not conclusive. If oven does not heat and all other components test good replace the magnetron and retest.
	Thermal cutout	Disconnect all wires from TCO. Measure resistance across terminals. Magnetron TCO ..... Cavity TCO	 Open at 230°F (110°C) and closed at 194°F (90°C) Opens at 320°F (160°C)
Monitor Secondary Primary	Interlock switch	Disconnect wires to switch. With door open measure resistance from: Monitor..... Secondary ..... Primary ..... With door closed measure resistance from: Monitor..... Secondary..... Primary	 Indicates continuity Infinite Infinite Infinite Indicates continuity Indicates continuity
	Capacitor	**Discharge Capacitor** Remove wires from capacitor terminals and connect ohmmeter, set on highest resistance scale to terminals. Also check between each terminal and capacitor case.	 Between Terminals: Meter should momentarily deflect towards zero then return to over 5 MΩ. If no deflection occurs, or if continuous deflection occurs, replace capacitor. Terminal to Case: Infinite resistance
	Fan Motor	Remove all wires from motor. Measure resistance across coil	 Approximately 63.6 Ω

©2004 Maytag Appliances Company

Wall Oven Disassembly Procedures

⚠ WARNING

To avoid risk of electrical shock, personal injury or death; disconnect power to unit before servicing.

⚠ CAUTION

To avoid risk of personal injury or property damage this unit requires a two person lift when lifting unit in or out of cutout.

Removing and Replacing Unit

1. Turn off power to the oven at the circuit breaker.
2. Open oven door and Microwave door to remove screws securing unit to the cabinet opening.

NOTE: Place a protective covering on the floor, to avoid damage to the floor.

3. Pull unit forward out of the cabinet opening.
4. Disconnect or unplug the power cord leading from unit to fuse box or junction box depending on unit.
5. Reinstall the oven using the installation instructions.

Control Panel Assembly

1. Turn off power to unit.
2. Remove screws securing trim piece(s) to the cabinet.
3. Slide unit out of cutout approximately 6 to 8 inches.

⚠ CAUTION

To avoid risk of property damage and personal injury, place blocking material undernieth the front edge of the wall oven to prevent unit from tipping forward.

4. Remove screws securing control panel assembly to unit chassis.
5. Label and disconnect wire terminal plugs from control board assembly.

⚠ CAUTION

While unplugging electrical connections, pins may be damaged, use extreme care when disconnecting.

6. Place control panel assembly on a protected surface.
7. Reverse procedure to reassemble.

Control Board Assembly

1. Remove control panel, see “Control Panel Assembly” procedure, steps 1 through 6.
2. Remove screws securing control board bracket to control panel assembly.
3. Label and disconnect ribbon terminal plug from control board assembly.
4. Reverse procedures to reassemble.

Touch Panel

1. Remove control panel, see “Control Panel Assembly” procedure, steps 1 through 3.
2. Remove screws securing touch panel to control panel assembly.

NOTE: Touch panel is loose, but the ribbon cable does not allow complete removal.

3. Disconnect ribbon cable from touch panel and remove touch panel.

⚠ CAUTION

While unplugging electrical connections, pins may be damaged, use extreme care when disconnecting.

4. Reverse procedure to reassemble.

Side Trim(s)

1. Remove control panel, see “Control Panel Assembly” procedure, steps 1 through 3.
2. Remove screws securing trim piece to unit chassis.
3. Reverse procedure to reassemble.

Stepdown Transformer(s)

NOTE: Requires removal of unit from cabinet.

NOTE: Requires removal of microwave from wall oven.

1. Turn off power to unit.
2. Remove screws securing trim piece(s) to the cabinet.
3. Remove unit from cutout.
4. Remove screws securing top cover to outer shell and remove top cover.
5. Label and disconnect wire terminals from transformer.
6. Remove screws securing transformer to control box.
7. Reverse procedure to reassemble.

Oven High Limit

NOTE: Requires removal of unit from cabinet.

NOTE: Requires removal of microwave from wall oven.

1. Turn power off to unit.
2. See “Control Panel Assembly” for removal.
3. Remove screws securing rear access cover, to gain access to limits switch.
4. Disconnect wire terminals from limit switch being replaced.
5. Remove screws securing limit switch to be replaced.
6. Reverse procedure to reassemble.

Wall Oven Disassembly Procedures

⚠ WARNING To avoid risk of electrical shock, personal injury or death; disconnect power to unit before servicing.

Oven Sensor (some models)

1. Turn off power to unit
2. Open oven door or remove oven door, see “Door Removal”.
3. Remove screws securing sensor to center portion of broiler element in the rear of the oven cavity.

NOTE: Gently pull wiring through cavity wall.

4. Pull sensor forward, manuver wires through insulation and broiler element bracket to disconnect wire plug connector.
5. Reverse procedure to reassemble sensor.

Oven Sensor (some models)

1. Disconnect power before servicing.
2. Open oven door or remove oven door, see “Door Removal”.
3. Remove screws securing sensor to oven cavity.

NOTE: Gently pull wiring through cavity wall.

4. Disconnect oven sensor at the connector block and remove.
5. Reverse procedure to reassemble sensor.

NOTE: Verify connection is pushed through the insulation.

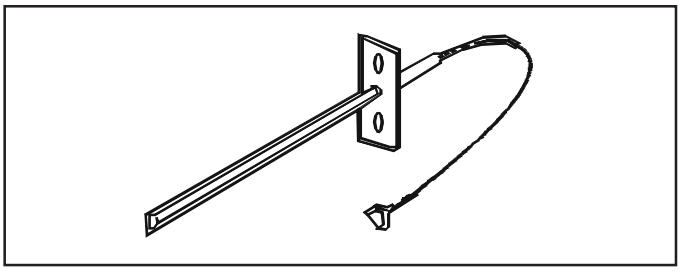

Broil Element / Broil Element Reflector

1. Turn off power to unit.
2. Open oven door or remove oven door, see “Door Removal”.
3. Remove screws securing broil element to top and rear of oven cavity.
4. Allow front of broil element to drop down, then pull forward to allow terminals to pass through oven cavity.
5. Disconnect wire terminals form element and sensor wire plug connector.
6. Remove screws securing oven sensor to broil element.
7. Reverse procedure to reassemble broil element.

Convection Fan Assembly

1. Turn off power to unit.
2. Open oven door or remove oven door, see “Door Removal”.
3. Remove screws securing convection fan cover to convection fan assembly.
4. Remove screws securing convection fan assembly to rear of oven cavity.
5. Slide convection fan assembly down and tilt forward on the top portion to allow assembly to pass through rear oven cavity.
6. Disconnect and label wires from convection fan motor.
7. Reverse procedure to reassemble convection fan assembly.

Oven Bake Element

NOTE: Requires removal of unit from cabinet.

1. Turn off power to unit.
2. Open oven door or remove oven door, see “Door Removal”.
3. Remove screws securing trim piece(s) to the cabinet.
4. Remove unit from cutout, see “Removing and Replacing Unit” procedure.
5. Disconnect or unplug the power cord leading from unit to fuse box or junction box depending on unit.
6. Remove screws securing rear top and bottom access panel.
7. Gently pull plastic wire clips from oven chassis securing wire harness.
8. Remove screws securing element panel to oven chassis.
9. Remove screws securing element support bracket.
10. Gently pull element and support bracket from oven chassis.
11. Reverse procedure to reassemble bake element.

Door Latch / Door Light Switch Assembly

1. Turn off power to unit.
2. Remove top oven door, see “Oven Door” procedure.
3. Remove screws securing middle trim piece between oven doors.
4. Remove screws securing latch assembly or door light switch to trim piece.
5. Disconnect and label wire terminals.
6. Remove latch assembly or door light switch from chassis.
7. Reverse procedure to reassemble door latch assembly or door light switch.

©2004 Maytag Appliances Company

⚠ WARNING To avoid risk of electrical shock, personal injury or death; disconnect power to unit before servicing.

Oven Light Assembly

Oven Light Bulb/Oven Light Socket (some models)

NOTE: Requires removal of unit from cabinet to replace oven light socket.

1. Turn off power to unit.
2. Open oven door to gain access to oven light.
3. Unscrew (counterclockwise) glass knurled dome.
4. Unscrew (counterclockwise) oven light bulb.

NOTE: To avoid damaging the new bulb and decreasing life of the bulb, do not touch new bulb with bare hands or fingers.
Hold with a cloth or paper towel.

NOTE: Proceed with the following steps for oven light socket removal.

5. Remove unit from cutout, see “Removing and Replacing Unit” procedure.
6. Disconnect or unplug the power cord leading from unit to fuse box or junction box depending on unit.
7. Remove screws securing outer wrapper back cover and remove.
8. Carefully displace fiberglass insulation away from rear of light socket.
9. Push inner assembly of light socket towards rear of range, or twist out, depending on style of base.
10. Disconnect wires from light socket.
11. Reverse procedure to reinstall light socket. Reposition insulation around lamp socket. Do not overtighten.

NOTE: Reposition fiberglass insulation around oven light socket to eliminate possibility of heat related problems.

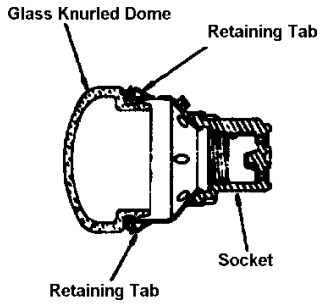

Oven Light Bulb/Oven Light Socket (some models)

NOTE: Requires removal of unit from cabinet to replace oven light socket.

The oven light used on the wall oven is a 12 volt 10 Watt Halogen bulb. The light automatically comes on when the door is opened or activation may occur via the light pad when the door is closed. The light will not operate during a clean cycle. The oven light will automatically come on one minute before the end of a clock controlled cooking operation.

1. Disconnect power before servicing.
2. Open oven door and locate oven light.
3. Grasp lens cover and pull outward on one side to gain access to bulb.
4. Carefully remove old bulb, by lifting bulb straight out of ceramic base.

NOTE: To avoid damaging the new bulb and decreasing life of the bulb, do not touch new bulb with bare hands or fingers.
Hold with a cloth or paper towel.

NOTE: Proceed with the following steps for oven light socket removal.

5. Remove unit from cutout, see “Removing and Replacing Unit” procedure.
6. Disconnect or unplug the power cord leading from unit to fuse box or junction box depending on unit.
7. Remove screws securing side wrapper and remove.
8. Carefully displace fiberglass insulation away from rear of light socket.
9. Release metal tabs on light socket and push socket assembly away from the oven cavity.
10. Disconnect wires from light socket.
11. Reverse procedure to reinstall light socket. Reposition insulation around lamp socket.

NOTE: Reposition fiberglass insulation around oven light socket to eliminate possibility of heat related problems.

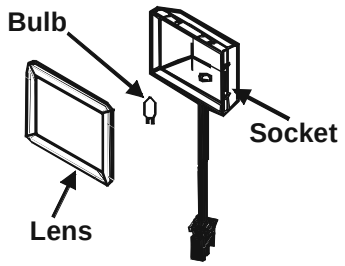

Bulb specifications
G4 Type Halogen Bi-Pin 10 w -12V

Wall Oven Disassembly Procedures

⚠ WARNING	To avoid risk of electrical shock, personal injury or death; disconnect power to unit before servicing.

Oven Door Removal

1. Open oven door and place door hinge locking device in lock postion.
2. Place oven door in first stop position, then grasp both sides and lift up off the hinges.
3. Reverse procedure to reassemble oven door.

Blower Motor

NOTE: Requires removal of unit from cabinet.

1. Remove unit from cutout, see “Removing and Replacing Unit” procedure.
2. Remove screws securing top access panel.
3. Disconnect and label wire terminals from blower motor.
4. Remove screws securing blower assembly to oven chassis.
5. Reverse procedure to reassemble blower motor.

Vent Assembly/Smoke Eliminator

1. Turn power off to unit.
2. Open oven door and remove screws securing unit to the wall.
3. Remove oven from cutout opening.
4. Disconnect or unplug the power cord leading from unit to fuse box or junction box depending on unit.
5. Remove screws securing top and back outer wrapper from the unit.
6. Remove screws securing vent assembly to outer cabinet top wrapper.
7. Raise back of vent assembly and slowly maneuver vent assembly away from unit.
8. Remove screws securing smoke eliminator, located inside oven on top of oven cavity.
9. Reverse procedure to reinstall.

Oven Door Hinge

1. Turn off power to unit.
2. Remove oven door, see “Door Removal”.
3. Remove control panel, see “Control Panel Assembly” procedure, steps 1 through 3.
4. Remove the top and bottom screws securing hinge assembly to the front frame.
5. Remove hinge from oven chassis.
6. Reverse procedure to reassemble oven door hinge.

Frameless Door Disassembly

1. Remove oven door, see "Oven Door Removal" procedure.
2. Place door on a protected surface.
3. Remove screws securing bottom trim to oven door.
4. Slide outer oven door glass and trim towards the bottom of the oven door and remove.
5. Detach right and left trim pieces for outer door glass.

NOTE: Proceed with the following steps for door hinge, door handle, and inner door disassembly.

6. Remove screws securing door hinge to oven door chassis.

NOTE: Proceed with the following steps for door handle and inner door disassembly.

7. Remove screws securing top door handle trim to oven door chassis.
8. Remove screws securing door handle brackets to inner door panel.
9. Lift upward on the lower side of the door handle to release side alignment screws and rotate towards the top of the oven door to release and remove.
10. Remove screws securing door handle to door handle brackets.

NOTE: Proceed with the following steps for inner door disassembly.

11. Remove screws securing lower door glass retainer to door baffle and remove.
12. Slide inner door glass downward to release from upper door glass retainers and remove.
13. Remove screws securing door baffle to door lining and remove.
14. Remove insulation from oven door.
15. Lift inner glass and glass frame from oven door.
16. Reverse procedure to reassemble oven door.

©2004 Maytag Appliances Company

Wall Oven Disassembly Procedures

WARNING	To avoid risk of electrical shock, personal injury or death; disconnect power to unit before servicing.

Frameless Door

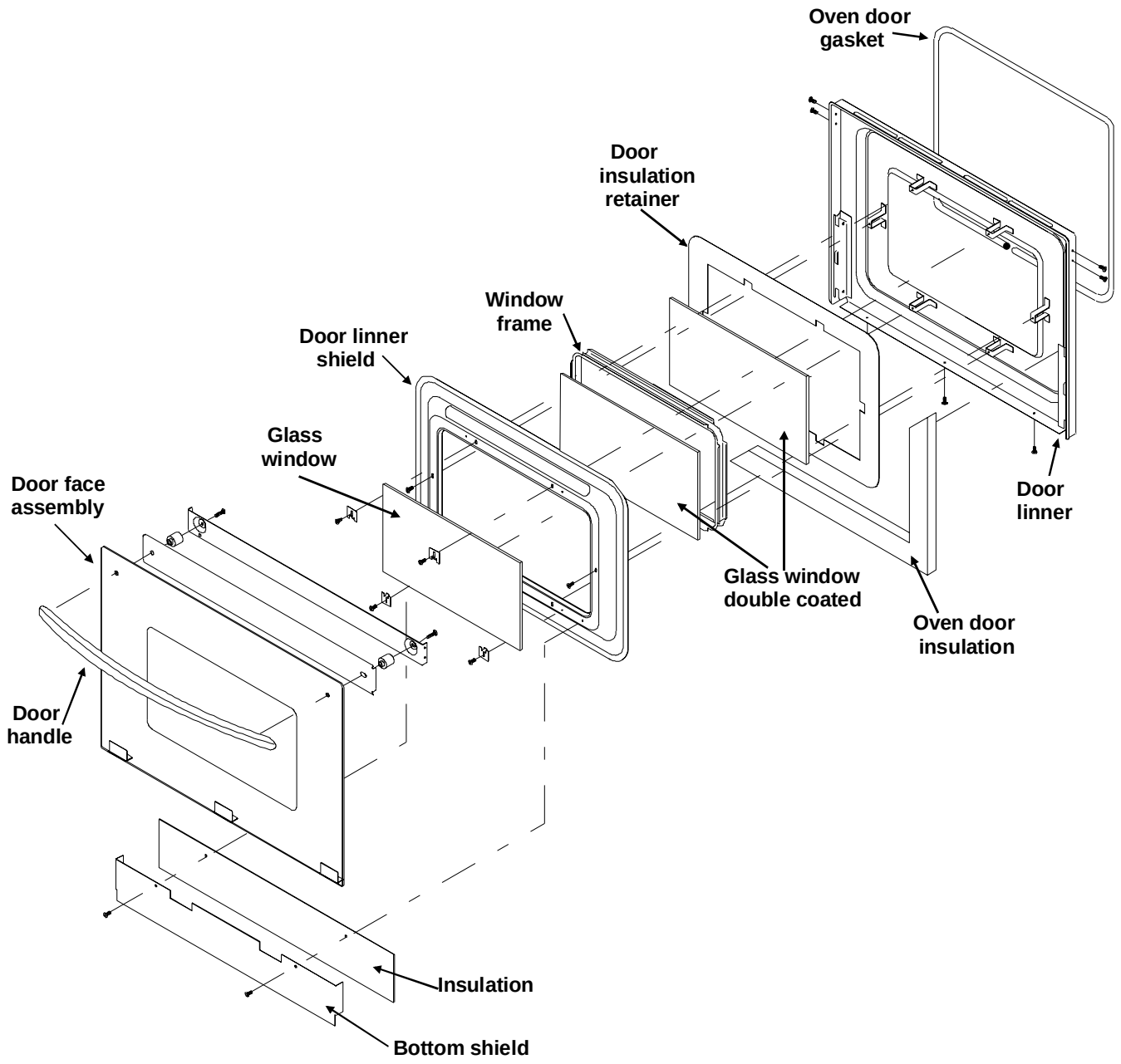

Door Assembly

Microwave Disassembly Procedures

WARNING To avoid risk of electrical shock, personal injury or death; disconnect power to unit before servicing.

CAUTION

To avoid risk of personal injury or property damage this unit requires a two person lift when lifting unit in or out of cutout.

Removing and Replacing Unit

1. Turn off power to the unit at the circuit breaker.
2. Open oven door and microwave door to remove screws securing unit to the cabinet opening.

NOTE: Place a protective covering on the floor, to avoid damage to the floor.

CAUTION

To avoid risk of property damage and personal injury, place blocking material underneath the front edge of the wall oven to prevent unit from tipping forward.

3. Pull unit forward out of the cabinet opening.
4. Disconnect or unplug the power cord leading from unit to fuse box or junction box depending on unit.
5. Reinstall the oven using the installation instructions.

Side Trim(s)

NOTE: Requires partial removal of unit from cabinet.

1. Remove screws securing trim piece(s) to the cabinet.
2. Slide unit out of cutout approximately 6 to 8 inches.

CAUTION

To avoid risk of property damage and personal injury, place blocking material underneath the front edge of the wall oven to prevent unit from tipping forward.

3. Remove screws securing trim piece to unit chassis.
4. Reverse procedure to reassemble.

Control Panel Assembly

NOTE: Requires removal of unit from cabinet.

1. Turn off power to the unit at the circuit breaker.
2. Open oven door and microwave door to remove screws securing trim of unit to the cabinet opening.

NOTE: Place a protective covering on the floor, to avoid damage to the floor.

CAUTION

To avoid risk of property damage and personal injury, place blocking material underneath the front edge of the wall oven to prevent unit from tipping forward.

3. Slide unit out of cutout.
4. Remove screws securing top wrapper to chassis and remove top cover.
5. Disconnect wire terminal plug from power control board.

CAUTION

While unplugging electrical connections, pins may be damaged, use extreme care when disconnecting.

6. Lift upward on control panel assembly and tilt top portion of assembly towards the front of unit to release plastic tabs securing assembly.
7. Place control panel assembly on a protected surface.
8. Reverse procedure to reassemble.

Control Board Assembly

NOTE: Requires removal of unit from cabinet.

1. Remove control panel, see “Control Panel Assembly” procedure, steps 1 through 7.
2. Disconnect terminal plug from control panel.
3. Slide control board holder to the left to release from control panel.
4. Release both plastic tabs securing control board to holder and tilt top portion of control board outward to remove.
5. Reverse procedures to reassemble.

©2004 Maytag Appliances Company

Microwave Disassembly Procedures

WARNING To avoid risk of electrical shock, personal injury or death; disconnect power to unit before servicing.

Touch Panel

NOTE: Requires removal of unit from cabinet.

1. Turn off power to the unit at the circuit breaker.
2. Open oven door and microwave door to remove screws securing trim of unit to the cabinet opening.

NOTE: Place a protective covering on the floor, to avoid damage to the floor.

CAUTION

To avoid risk of property damage and personal injury, place blocking material underneath the front edge of the wall oven to prevent unit from tipping forward.

3. Slide unit out of cutout.
4. Remove screws securing top wrapper to chassis and remove top cover.
5. Disconnect terminal plug from control panel.

CAUTION

While unplugging electrical connections, pins may be damaged, use extreme care when disconnecting.

6. Slide control board holder to the left to release from control panel.
7. Reverse procedure to reassemble.

Control Power Board

NOTE: Requires removal of unit from cabinet.

1. Turn off power to the unit at the circuit breaker.
2. Open oven door and microwave door to remove screws securing trim of unit to the cabinet opening.

NOTE: Place a protective covering on the floor, to avoid damage to the floor.

CAUTION

To avoid risk of property damage and personal injury, place blocking material underneath the front edge of the wall oven to prevent unit from tipping forward.

3. Slide unit out of cutout.
4. Remove screws securing top wrapper to chassis and remove top cover.
5. Label and disconnect wire terminals from control power board.

CAUTION

While unplugging electrical connections, pins may be damaged, use extreme care when disconnecting.

6. Remove screws securing transformer to power control board bracket.
7. Reverse procedure to reassemble.

Filter Assembly Board

NOTE: Requires removal of unit from cabinet.

1. Turn off power to the unit at the circuit breaker.
2. Open oven door and microwave door to remove screws securing trim of unit to the cabinet opening.

NOTE: Place a protective covering on the floor, to avoid damage to the floor.

CAUTION

To avoid risk of property damage and personal injury, place blocking material underneath the front edge of the wall oven to prevent unit from tipping forward.

3. Slide unit out of cutout.
4. Remove screws securing top wrapper to chassis and remove top cover.
5. Label and disconnect wire terminals from filter assembly board.
6. Remove screws securing filter assembly board to blower bracket.
7. Reverse procedure to reassemble.

WARNING To avoid risk of electrical shock, personal injury or death; disconnect power to unit before servicing.

TCO Limit Switches (Oven and Magnetron)

NOTE: Requires removal of unit from cabinet.

1. Turn off power to the unit at the circuit breaker.
2. Open oven door and microwave door to remove screws securing trim of unit to the cabinet opening.

NOTE: Place a protective covering on the floor, to avoid damage to the floor.

CAUTION

To avoid risk of property damage and personal injury, place blocking material underneath the front edge of the wall oven to prevent unit from tipping forward.

3. Slide unit out of cutout.
4. Remove screws securing top to chassis and remove top cover.

Magnetron TCO

5. Disconnect wire terminals from magnetron TCO switch.
6. Remove screw securing TCO to magnetron.

Oven TCO

7. Remove screws securing right side wrapper and sliding right side wrapper towards the back of the unit.

NOTE: To release front edge of side wrapper, slightly pry support bracket away from side wrapper, while sliding panel towards the back of unit.

8. Disconnect wire terminals from limit switch.
9. Remove screw securing light socket to side air vent.
10. Remove light assembly from mounting area.
11. Remove screws securing barrier bracket to side air vent and remove.
12. Remove screw securing side air vent to magnetron.
13. Pull outward on the bottom of the side air vent to allow limit switch to be removed.
14. Reverse procedure to reassemble.

Oven Sensor

NOTE: Requires removal of unit from cabinet.

1. Turn off power to the unit at the circuit breaker.
2. Open oven door and microwave door to remove screws securing trim of unit to the cabinet opening.

NOTE: Place a protective covering on the floor, to avoid damage to the floor.

CAUTION

To avoid risk of property damage and personal injury, place blocking material underneath the front edge of the wall oven to prevent unit from tipping forward.

3. Slide unit out of cutout.
4. Remove screws securing top wrapper to chassis and remove top cover.
5. Remove screws securing sensor to center portion of the oven cavity.
6. Disconnect wire terminal plug connector from power control board.
7. Reverse procedure to reassemble sensor.

Oven Light Assembly

NOTE: Requires removal of unit from cabinet to replace oven light or light socket.

1. Turn off power to the unit at the circuit breaker.
2. Open oven door and microwave door to remove screws securing trim of unit to the cabinet opening.

NOTE: Place a protective covering on the floor, to avoid damage to the floor.

CAUTION

To avoid risk of property damage and personal injury, place blocking material underneath the front edge of the wall oven to prevent unit from tipping forward.

3. Slide unit out of cutout.
4. Remove screws securing top wrapper to chassis and remove top cover.
5. Remove screws securing light socket to side air vent.
6. Replace oven light.
7. Disconnect wire terminals from light socket, if socket needs replaced.
8. Reverse procedure to reassemble.

 ©2004 Maytag Appliances Company

Microwave Disassembly Procedures

WARNING To avoid risk of electrical shock, personal injury or death; disconnect power to unit before servicing.

Magnetron

NOTE: Requires removal of unit from cabinet.

1. Turn off power to the unit at the circuit breaker.
2. Open oven door and microwave door to remove screws securing trim of unit to the cabinet opening.

NOTE: Place a protective covering on the floor, to avoid damage to the floor.

CAUTION

To avoid risk of property damage and personal injury, place blocking material underneath the front edge of the wall oven to prevent unit from tipping forward.

3. Slide unit out of cutout.
4. Remove screws securing top and right side wrapper to chassis and remove top cover.
5. Slide right side wrapper towards the back of the unit.

NOTE: To release front edge of side wrapper, slightly pry support bracket away from side wrapper, while sliding panel towards the back of unit.

6. Disconnect wire terminals from magnetron.
7. Remove screw securing side air vent to magnetron.
8. Remove screws securing magnetron to waveguide bracket.

NOTE: When replacing magnetron, verify magnetron gasket is in good condition and correctly positioned.

9. Reverse procedure to reassemble.

Transformer

NOTE: Requires removal of unit from cabinet.

1. Turn off power to the unit at the circuit breaker.
2. Open oven door and microwave door to remove screws securing trim of unit to the cabinet opening.

NOTE: Place a protective covering on the floor, to avoid damage to the floor.

CAUTION

To avoid risk of property damage and personal injury, place blocking material underneath the front edge of the wall oven to prevent unit from tipping forward.

3. Slide unit out of cutout.
4. Remove screws securing top and right side wrapper to chassis and remove top cover.
5. Slide right side wrapper towards the back of the unit.

NOTE: To release front edge of side wrapper, slightly pry support bracket away from side wrapper.

6. Disconnect wire terminals from transformer.

NOTE: Removal of magnetron maybe required to gain better access to transformer screws.

7. Remove screws securing transformer to chassis.
8. Reverse procedure to reassemble.

Blower Motor

NOTE: Requires removal of unit from cabinet.

1. Turn off power to the unit at the circuit breaker.
2. Open oven door and microwave door to remove screws securing trim of unit to the cabinet opening.

NOTE: Place a protective covering on the floor, to avoid damage to the floor.

CAUTION

To avoid risk of property damage and personal injury, place blocking material underneath the front edge of the wall oven to prevent unit from tipping forward.

3. Slide unit out of cutout.
4. Remove screws securing top and right side wrapper to chassis and remove top cover.
5. Slide right side wrapper towards the back of the unit.

NOTE: To release front edge of side wrapper, slightly pry support bracket away from side wrapper, while sliding panel towards the back of unit.

6. Disconnect wire terminals from blower motor.
7. Remove screws securing blower motor bracket to the back panel.
8. Remove screw securing diode terminal to ground terminal.
9. Carefully maneuver the blower motor bracket out of the oven chassis.
10. Disconnect wire terminals from blower motor.
11. Remove screws securing blower motor to blower motor bracket.
12. Reverse procedure to reassemble.

Microwave Disassembly Procedures

WARNING

To avoid risk of electrical shock, personal injury or death; disconnect power to unit before servicing.

Turntable Motor

NOTE: Requires removal of unit from cabinet.

1. Turn off power to the unit at the circuit breaker.
2. Open oven door and microwave door to remove screws securing trim of unit to the cabinet opening.

NOTE: Place a protective covering on the floor, to avoid damage to the floor.

CAUTION

To avoid risk of property damage and personal injury, place blocking material underneath the front edge of the wall oven to prevent unit from tipping forward.

3. Slide unit out of cutout.
4. Remove screws securing microwave to the wall oven (front trim bracket, back, left and right sides).
5. Tip unit on it's back.
6. Remove screw securing access panel to bottom of microwave cabinet.
7. Remove access panel.
8. Disconnect wire terminals from turntable motor.
9. Reverse procedure to reassemble.

Oven Door Removal

1. Open oven door and place door hinge locking device into the hinge hole of both sides of the oven door.

NOTE: You will have to custom fabricate two hinge locking device, which needs to be approximately 1/4" thick, 5/8" wide, and at least 1-1/2" long.

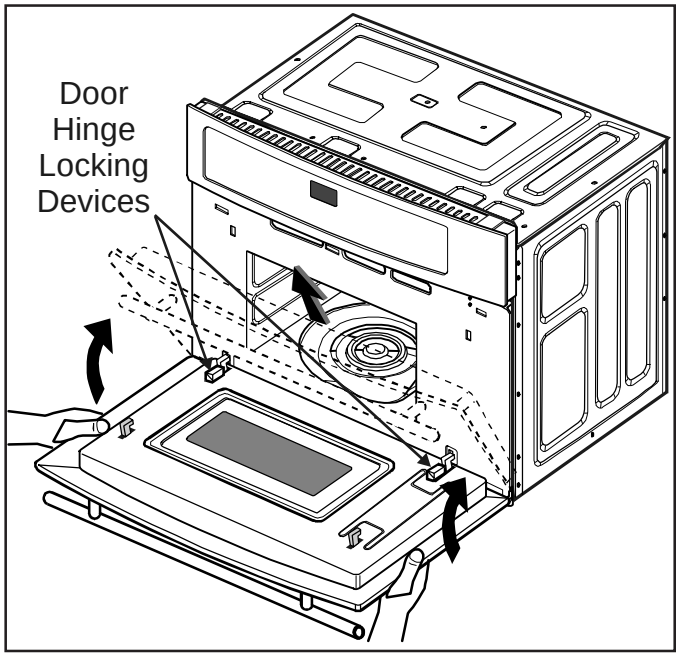

2. While grasping both sides of the oven door, raise the oven door upward, to release the oven door hinges from the oven chassis.
3. Reverse procedure to reassemble oven door.

©2004 Maytag Appliances Company

Microwave Disassembly Procedures

⚠ WARNING	To avoid risk of electrical shock, personal injury or death; disconnect power to unit before servicing.

Door Disassembly

1. Remove oven door, see “Oven Door Removal” procedure.
2. Place door on a protected surface.
3. Remove screws (course threaded) securing bottom glass trim to oven door.
4. Remove screws (fine threaded) securing top glass trim to oven door.
5. Remove outer door glass from inner door.

NOTE: Proceed with the following steps for door hinge, door handle, and interlock latch.

NOTE: If replacing door hinges, remove hinge locking devices from both hinges. If not replacing door hinges, leave hinge locking devices in place.

Door Hinges

6. Remove screws securing door hinge to inner door assembly.

NOTE: Proceed with the following steps for door handle and interlock latch.

Door Handle

7. Remove nuts securing door handle to outer door glass.

NOTE: Proceed with the following steps for interlock latch.

Interlock Latches

8. Remove spring from latch bracket to release tension.
9. Remove latch pin securing latch to latch bracket.
10. Reverse procedure to reassemble door.

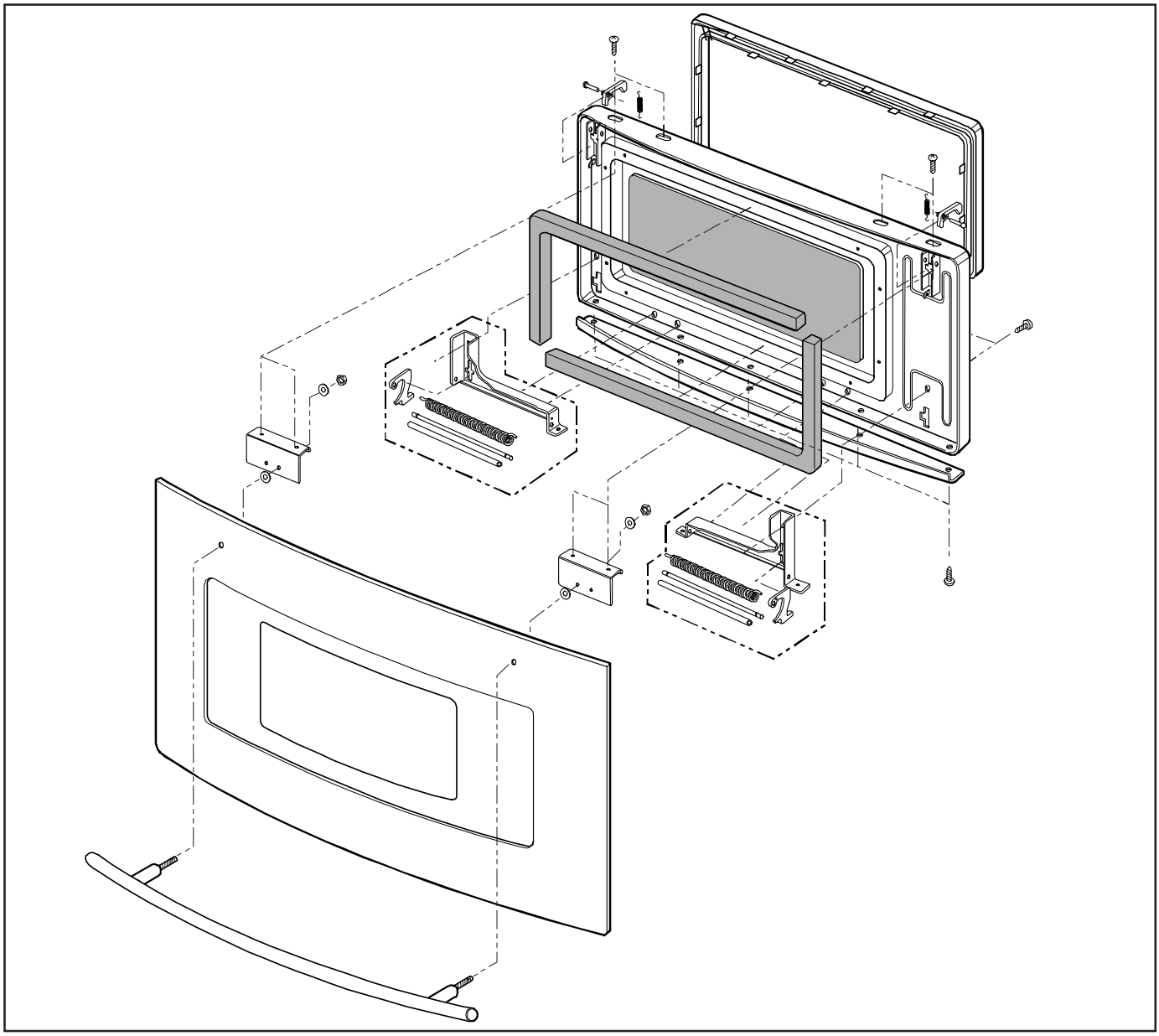

This page intentionally left blank.

©2004 Maytag Appliances Company

Appendix A

INSTALLATION INSTRUCTIONS

Built-In 27″ & 30″ Electric Combination Wall Ovens

JENN-AIR
403 WEST FOURTH STREET, NORTH
NEWTON, IA 50208

27″ WALL OVEN DESCRIPTION	
1	1-1/4″ Dia. Conduit Access Hole*
2	5/8″ Plywood Floor (Must Support 275 lbs.)

DIMENSIONS		
	in	cm
A	27 MIN	68.58 MIN
B	24 MIN	60.96 MIN
C	51-7/8 ± 1/16	131.76 ± .16
D	24 MIN	60.96 MIN
E	25-1/2 ± 1/16	64.77 ± .16
F	52-15/16	134.46
G	26-3/4	67.95
H	25-7/16	64.61
I	4 to 10	10.2 to 25.4

* Hole must be cut as close to corner of cabinet as possible.

NOTES	
Z	Do not block air exhaust slots along bottom of oven.

30″ WALL OVEN DESCRIPTION	
1	1-1/4″ Dia. Conduit Access Hole*
2	5/8″ Plywood Floor (Must Support 275 lbs.)

DIMENSIONS		
	in	cm
A	30 MIN	76.20 MIN
B	24 MIN	60.96 MIN
C	51-7/8 ± 1/16	131.76 ± .16
D	24 MIN	60.96 MIN
E	28-1/2 ± 1/16	72.39 ± .16
F	52-15/16	134.46
G	29-3/4	75.57
H	25-7/16	64.61
I	4 to 10	10.2 to 25.4

CAUTION

For European style cabinets (flush front) the required clearance for operation of the oven door is minimum spacing of 7/8″ between the cutout and the door, hinge or drawer of the cabinet.

Some built-in cabinets may not be wide enough, due to their construction, to allow this installation.

COMBINATION WALLOVEN CUTOUT

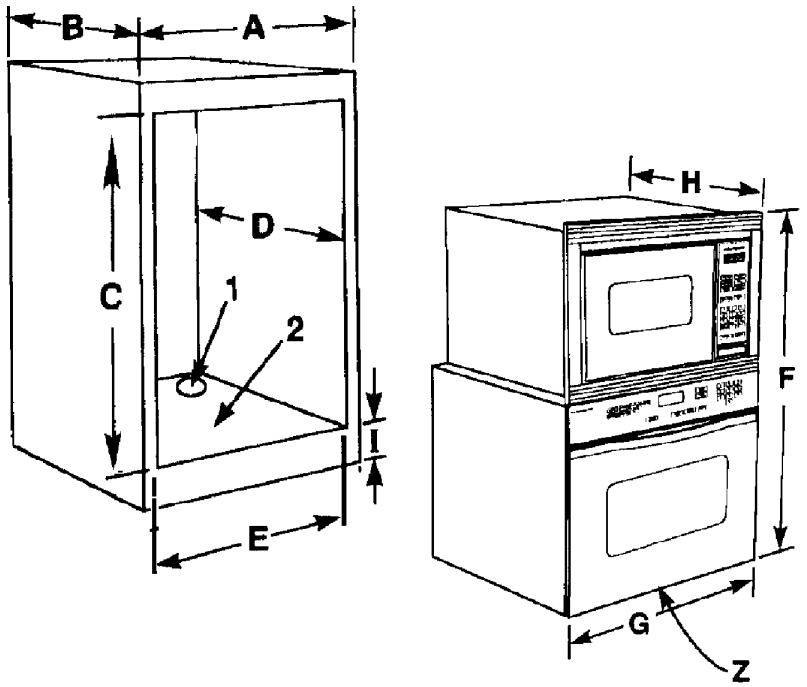

8101P483-60
(05-03-00)

©2004 Maytag Appliances Company

Installation Instructions

Installation

1. Cut hole in cabinet to mount oven. Cutout in cabinet should be level and straight.

   NOTE: There are no provisions to level the unit after it is installed. An oven that is not level could cause poor baking results.

2. Install plywood floor as shown.
3. Remove oven door(s). See Oven Door Removal procedure.
4. Attach unit to the cabinet with four No. 8 x 1″ screws supplied with unit inside of envelope containing these instructions. Pre-drill holes in cabinet for attachment screws using 1/8″ drill. Oven mounting holes are provided in side trim.
5. Install bottom trim.
6. Replace oven door(s). See Oven Door Replacement procedure.
7. See instructions at right for electrical hook-up.
8. See Use and Care Manual for operating instructions.

Installing Bottom Trim Piece

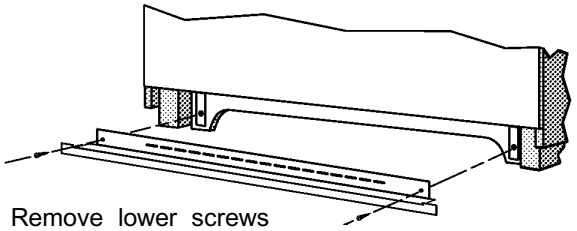

Remove lower screws from hinge receptacle plates. Align lower trim and reinstall screws.

DO NOT INSTALL BOTTOM TRIM UNTIL UNIT IS ATTACHED TO THE CABINET.

Electrical Connections

Unit to be properly circuit protected and wired according to local electrical code and National Electrical Code.

It is advisable that the electrical wiring and hookup be accomplished by a competent electrician.

120/240 VAC or 120/208 VAC 60 Hz. See serial plate on each unit for power requirements.

The neutral of the lower unit is grounded to the frame through the green or solid grounding wire. (The green and the white wires are twisted together at the termination of the conduit.) If used on new branch-circuit installations (1996 NEC), mobile homes, recreational vehicles, or in an area where local codes prohibit grounding through the neutral conductor, untwist or disconnect the green wire and connect the green wire to ground in accordance with local code. Connect the white neutral to the service neutral. Connect all wires to the branch circuit with approved connectors. Use copper or aluminum wire. If aluminum wire is used, use connectors recognized for joining aluminum to copper.

The chart below recommends the minimum circuit protection and wire size if the appliance is the only unit on the circuit.

K.W. RATING ON SERIAL PLATE	RECOMMENDED MINIMUM CIRCUIT PROTECTION IN AMPRES	WIRE SIZE (AWG)
0 - 4.8	20	12
4.9 - 6.9	30	10
7.0 - 9.9	40	8
10.0 - 11.9	50	8
12.0 - 14.9	60	6

⚠ WARNING

Improper installation of the grounding circuit can result in a risk of electric shock.

Consult a qualified electrician or serviceman if the grounding instructions are not completely understood, or if doubt exists as whether the appliance is properly grounded.

Service

Interrupt the source of electricity to the unit when attempting to repair or service the oven. Failure to do this could result in a dangerous or even fatal shock.

IMPORTANT - SAVE FOR LOCAL ELECTRICAL INSPECTOR'S USE

©2004 Maytag Appliances Company

Oven Door Removal

For ease of installation, remove oven door(s) before placing unit into cutout. This will reduce the weight of the unit by about 35 pounds per door. Remove oven door(s) as follows:

- Open oven door to the “Full Open” position (see Figure 1).
- Rotate hinge locking lever DOWN, to unlock hinge from the unit (see Figure 2).
- Close oven door to the “Removal” position (until it stops; see Figure 3).
- Grasp the door firmly on each side and lift the door straight up and off the unit.

NOTE: The oven door is heavy. Be sure you have a firm grip before lifting the oven door off the unit.

Do not lift the door by the handle!

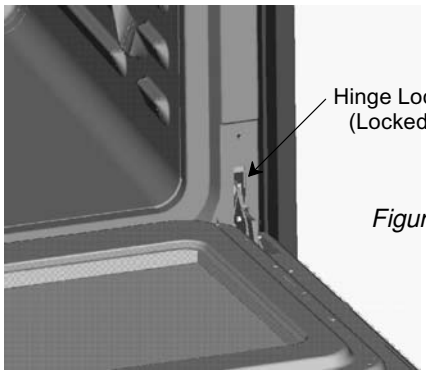

Figure 1

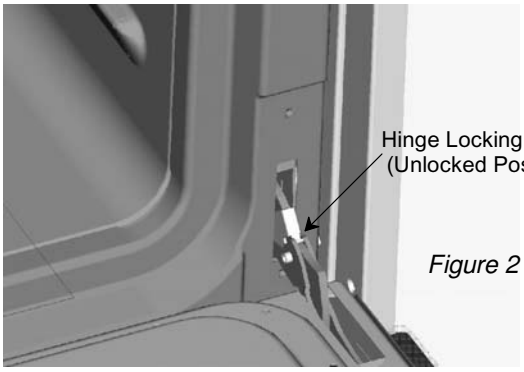

Figure 2

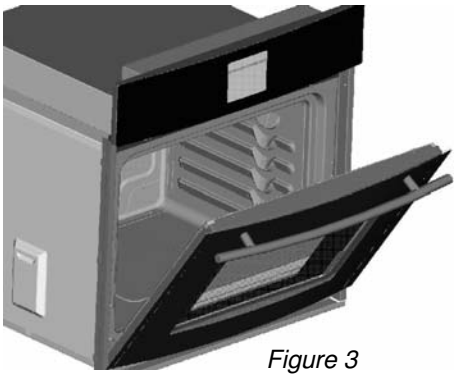

Figure 3

Oven Door Replacement

Replace oven door(s) after placing unit into cutout. Replace oven door(s) as follows:

- Grasp oven door firmly on each side, hold oven door at approximately a 30° angle and align oven door hinge arm (see Figure 4) with hinge receiver on unit (see Figure 5).
- Insert oven door hinge arm into hinge receiver until the hinge arm slots (see Figure 4) align with horizontal pins on the hinge receiver (see Figure 5) and place hinge arm onto the hinge receiver.
- Once the hinge arms are resting on the hinge receiver pins (see Figure 3) open oven door slowly to the “Full Open” position (see Figure 2).
- Rotate hinge locking lever UP to the locked position to secure the oven door to the unit (see Figure 1).

NOTE: Make sure that hinge locking lever is rotated fully UP to the locked position as shown (see Figure 1) before closing oven door.

CAUTION

Door will not close all the way and could fall off when opened if the hinge locking levers are not rotated fully UP to the locked position.

If hinge locking lever will not rotate fully UP to the locked position as shown (see Figure 1) then the hinge arm is not properly seated on the receiver. Rotate the hinge locking lever DOWN to the unlocked position (see Figure 2) and remove oven door as outlined in the Oven Door Removal procedure. Then replace the oven door as outlined in the Oven Door Replacement procedure, making sure that the hinge arm slots are fully seated on the horizontal pins in the hinge receiver.

- Once the hinge locking lever is rotated fully UP to the locked position (see Figure 1) close the oven door.

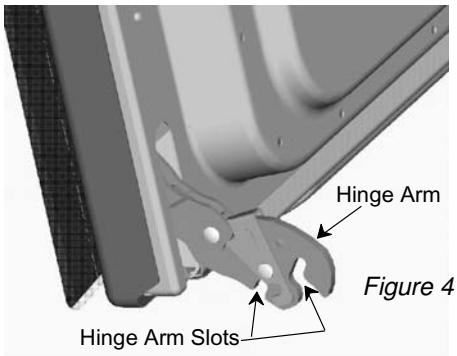

Figure 4

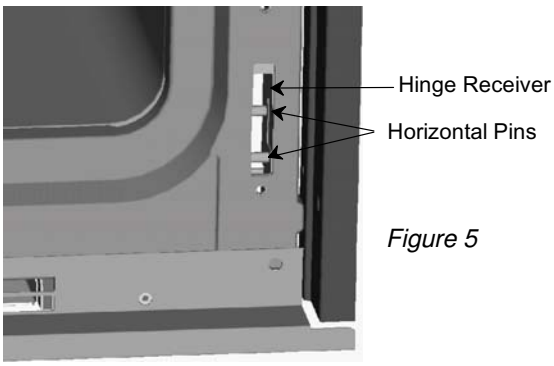

Figure 5

 ©2004 Maytag Appliances Company

Installation Instructions

JENN-AIR®

THE SIGN OF A GREAT COOK®

30" | MICROWAVE/WALL OVEN COMBO

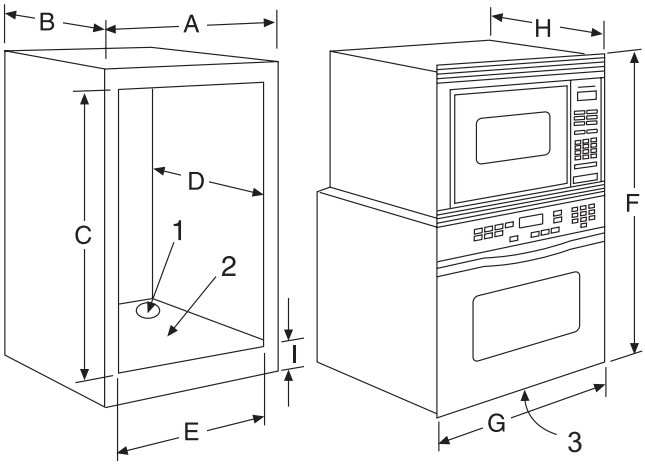

Dimensions

■	Inches	Centimeters
A	30 minimum	76.2 minimum
B	24 minimum	61.0 minimum
C	51 7/8± 1/16	131.8± .2
D	24 minimum	61.0 minimum
E	28 1/2± 1/16	72.4 ± .2
F	52 15/16	134.5
G	29 3/4	75.6
H	25 7/16	64.6
I	4 - 10	10.2 - 25.4

Notes:
1. 1 1/4" diameter conduit access hole (hole must be cut as close to corner of cabinet as possible).
2. 5/8" plywood floor (must support 275 lbs.)
3. Do not block air intake slots along bottom of oven.

Electrical Requirements: Provide for 120/240 or 120/208 VAC, 60 Hz. See serial plate on front of unit for power requirements.

Important: Because of continuing product improvements, Jenn-Air reserves the right to change specifications without notice. Dimensional specifications are provided for planning purposes only. For complete details see installation instructions that accompany each product before selecting cabinetry, making cutouts or beginning installation.

©2004 Maytag Appliances Company

INSTALLATION INSTRUCTIONS	Built-In 30″ Electric Combination Wall Ovens	403 WEST FOURTH STREET, NORTH NEWTON, IA 50208

30″ WALL OVEN DESCRIPTION	
1	1-1/4″ Dia. Conduit Access Hole*
2	5/8″ Plywood Floor (Must Support 250 lbs.)

DIMENSIONS		
	in	cm
A	30 MIN	76.20 MIN
B	24 MIN	60.96 MIN
C	47 ± 1/16	119.38 ± .16
D	24 MIN	60.96
E	28-1/2 ± 1/16	72.39 ± .16
F	47-5/8	120.97
G	29-3/4	75.57
H	24-7/16	62.07
I	4 to 20	10.2 to 50.8

* Hole must be cut as close to corner of cabinet as possible.

NOTES	
Z	Do not block air intake slots along bottom of oven.

COMBINATION WALLOVEN CUTOUT

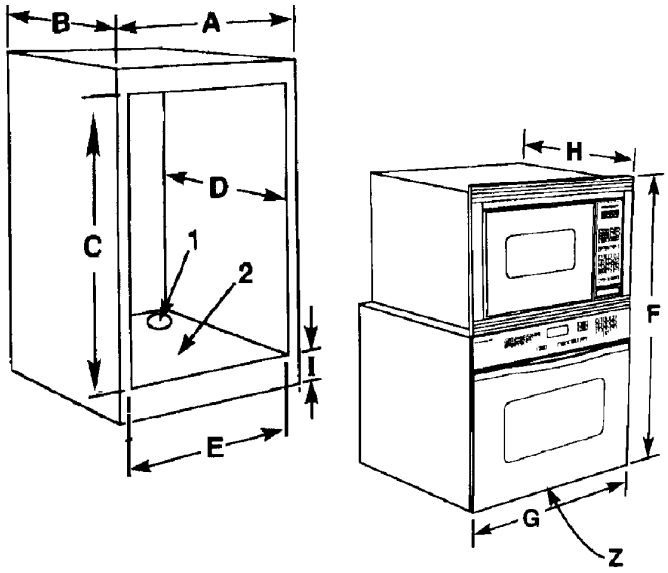

INSTALLATION

1. Cut hole in cabinet to mount oven. Cutout in cabinet should be level and straight.

   NOTE: There are no provisions to level the unit after it is installed. An oven that is not level could cause poor baking results.
2. Install plywood floor as shown above.
3. Attach unit to the cabinet with 4 No. 8″ flat head screws supplied inside of envelope containing these instructions. Pre-drill holes in cabinet for attachment screws using 1/8″ drill. Oven mounting holes are provided in side trim.
4. See instructions “Electrical Connections” for electrical hook-up.
5. See figure 1 for lower trim installation.
6. See User’s Manual for operating instructions.

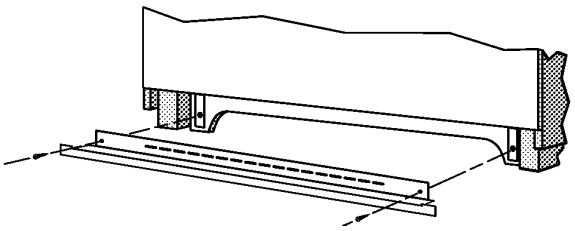

FIGURE 1

Remove lower screws from hinge receptacle plates. Align lower trim and reinstall screws.

NOTE: Lower trim overlaps front edge of cabinet by 9/16″.

CAUTION

For European style cabinets (flush front) the required clearance for operation of the oven door is minimum spacing of 7/8″ between the cutout and the door, hinge or drawer of the cabinet.

Some built-in cabinets may not be wide enough, due to their construction, to allow this installation.

8101P565-60
(07-03-00)

©2004 Maytag Appliances Company

ELECTRICAL CONNECTIONS

Unit to be properly circuit protected and wired according to local electrical code and National Electrical Code.

It is advisable that the electrical wiring and hookup be accomplished by a competent electrician.

120/240 VAC or 120/208 VAC 60 Hz. See serial plate on each unit for power requirements.

The neutral of the lower unit is grounded to the frame through the green or solid grounding wire. (The green and the white wires are twisted together at the termination of the conduit.) If used on new branch-circuit installations (1996 NEC), mobile homes, recreational vehicles, or in an area where local codes prohibit grounding through the neutral conductor, untwist or disconnect the green wire and connect the green wire to ground in accordance with local code. Connect the white neutral to the service neutral. Connect all wires to the branch circuit with approved connectors. Use copper or aluminum wire. If aluminum wire is used, use connectors recognized for joining aluminum to copper.

The chart below recommends the minimum circuit protection and wire size if the appliance is the only unit on the circuit.

K.W. RATING ON SERIAL PLATE	RECOMMENDED MINIMUM CIRCUIT PROTECTION IN AMPRES	WIRE SIZE (AWG)
0 - 4.8	20	12
4.9 - 6.9	30	10
7.0 - 9.9	40	8
10.0 - 11.9	50	8
12.0 - 14.9	60	6

WARNING

Improper installation of the grounding circuit can result in a risk of electric shock.

Consult a qualified electrician or serviceman if the grounding instructions are not completely understood, or if doubt exists as whether the appliance is properly grounded.

SERVICE

Interrupt the source of electricity to the unit when attempting to repair or service the oven. Failure to do this could result in a dangerous or even fatal shock.

IMPORTANT - SAVE FOR LOCAL ELECTRICAL INSPECTOR'S USE

©2004 Maytag Appliances Company